NOTES:

1. THIS DRAWING IS TO BE USED AS A GUIDE ONLY. PLEASE REFER TO THE TWIN DISC SERVICE MANUAL 1022808 FOR INSTALLATION INSTRUCTIONS FOR THE DRIVE AND CYLINDER ASSEMBLIES.
2. TRANSOM ANGLE FOR ASD UNITS TO BE 6 DEGREES TO VERTICAL, PLUS OR MINUS 1 DEGREE, AS SHOWN IN THE SIDE VIEW. A MOUNTING WEDGE IS REQUIRED FOR TRANSOM ANGLES OTHER THAN 6 DEGREES.
3. BACKING PLATES OF SAME APPROXIMATE DIMENSIONS AS SHOWN FOR EQUIPMENT FOOTPRINT ARE SUPPLIED. ADEQUATE CLEARANCE INSIDE VESSEL TRANSOM SHOULD BE PROVIDED.
4. DRILL ALL HOLES PERPENDICULAR TO TRANSOM.
5. WHEN INSTALLING, APPLY MARINE ADHESIVE SEALANT TO THESE MOUNTING FACES.

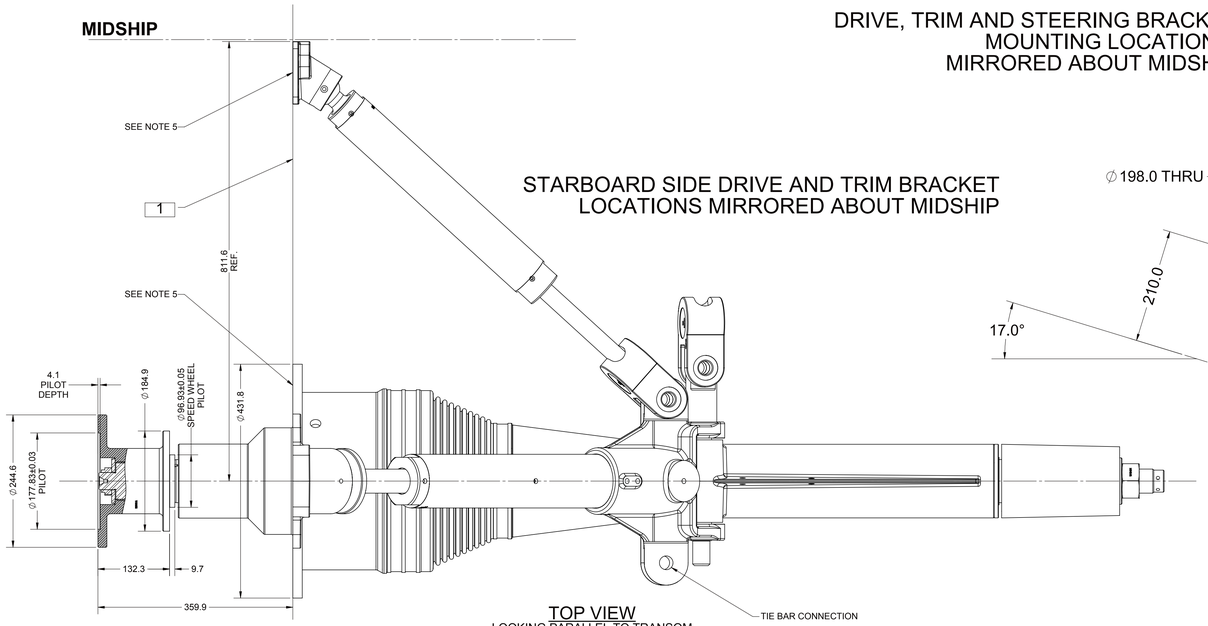

STARBOARD SIDE DRIVE AND TRIM BRACKET LOCATIONS MIRRORED ABOUT MIDSHIP

TOP VIEW
LOOKING PARALLEL TO TRANSOM

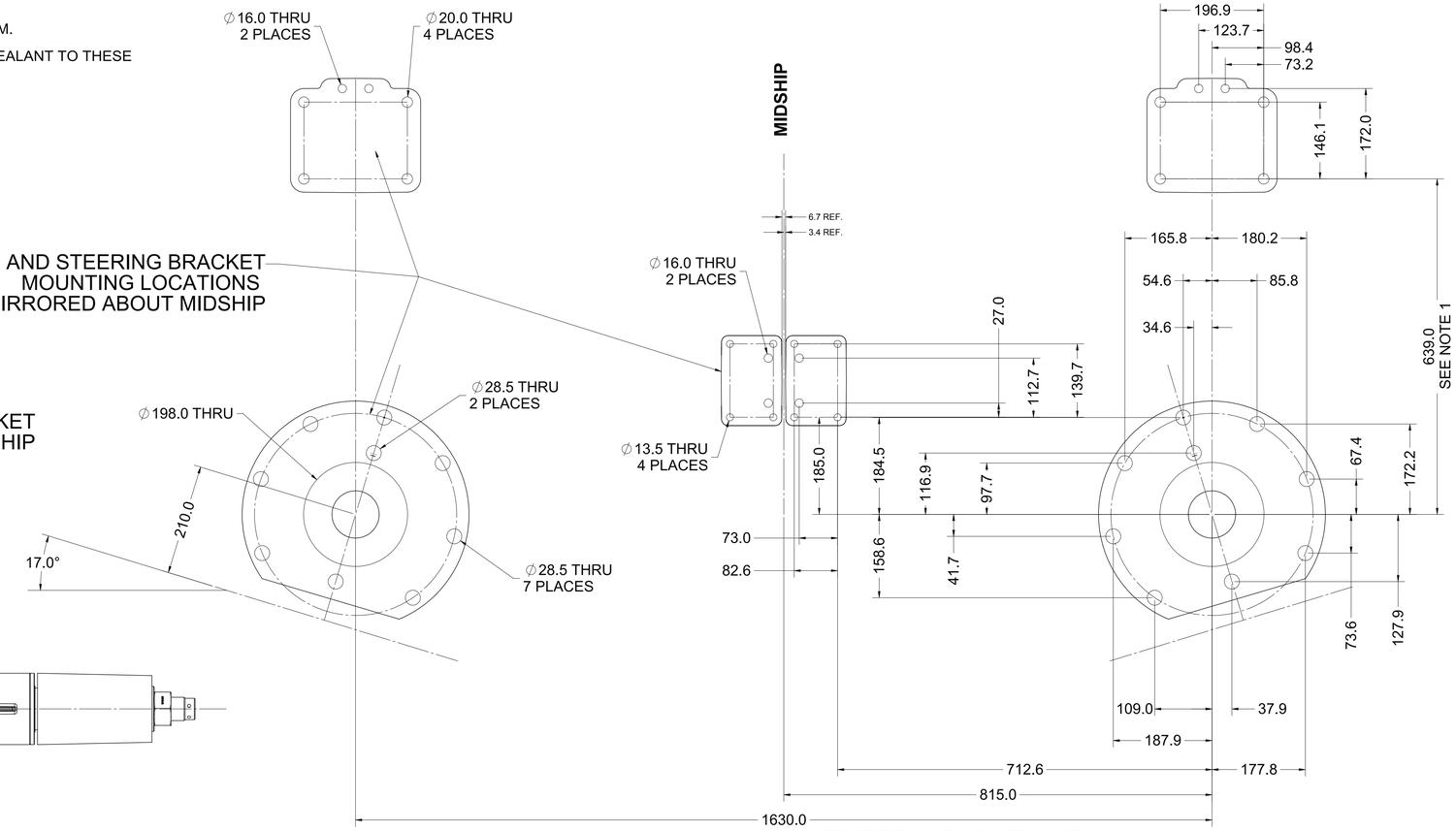

EXTERIOR OUTLINE
LOOKING TOWARD TRANSOM

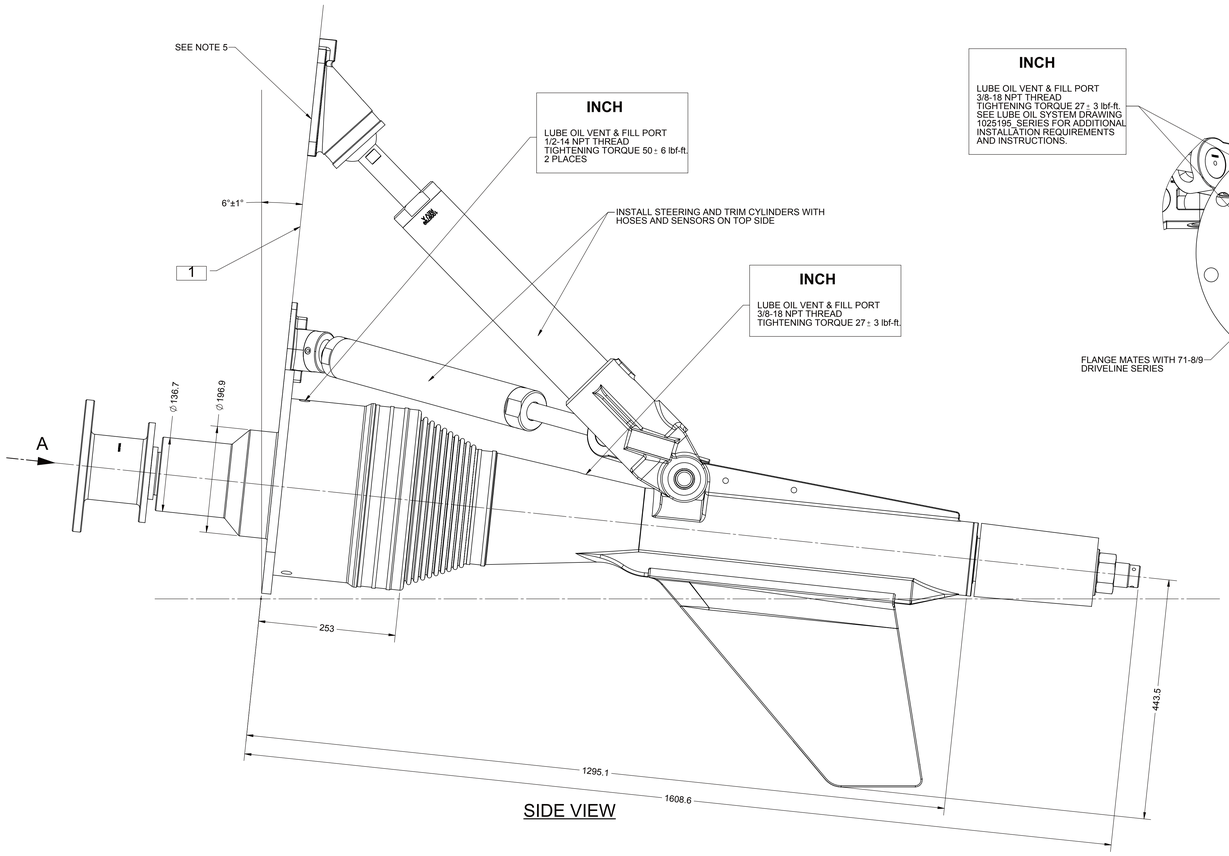

SIDE VIEW

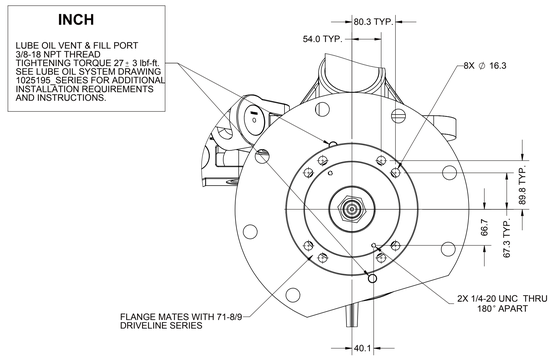

VIEW A

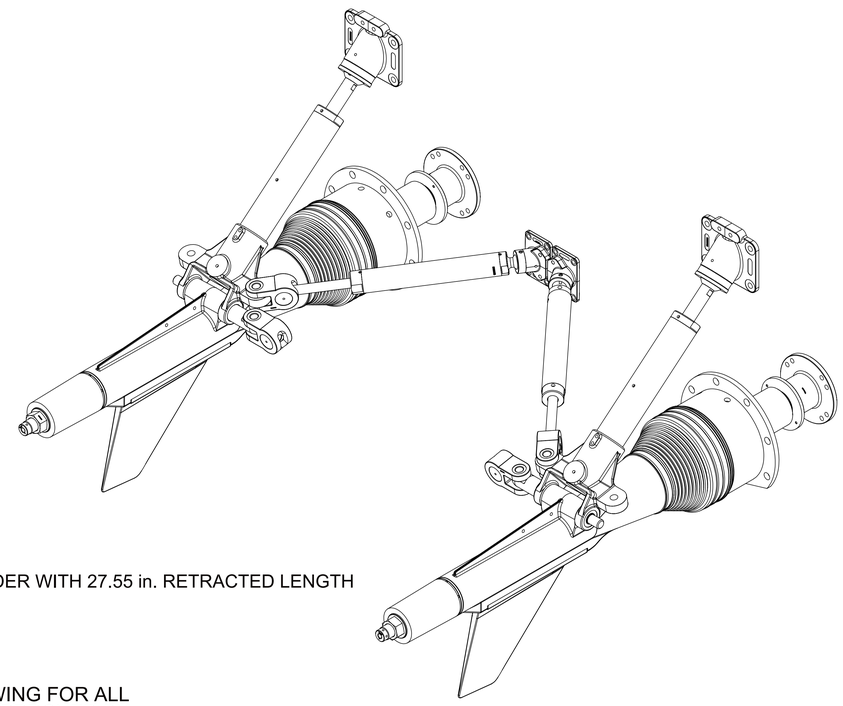

EQUIPMENT SHOWN:
- ASD12L PER 1025697 SERIES
- 1009234 SERIES TRIM CYLINDER
- 1009236 SERIES STEERING CYLINDER WITH 27.55 in. RETRACTED LENGTH

APPROVED APPLICATIONS:
- MP-0706

USE OF THIS INSTALLATION DRAWING FOR ALL OTHER APPLICATIONS MUST BE APPROVED BY TWIN DISC APPLICATION ENGINEERING.

1 AFT TRANSOM FACE

OBSOLETE. NOT FOR USE. (A)

REV	CHANGE NO.	DATE
A	ECNWF-100794	11/07/2019

TWIN DISC
RACINE, WI 53403 - USA

FIRST USE ASSEMBLY:
FIRST USE MODEL: ASD-12L
SIMILAR TO: 1017592
WEIGHT: kg / lbs kg-m²
THIRD ANGLE PROJECTION
METRIC
UNLESS OTHERWISE SPECIFIED MACHINED DIMENSIONS X.X ±0.25 X.XX ±0.13 X.XXX ±0.10 ALL ANGLES AND TOLERANCES ±1° DEBURR AND BREAK SHARP EDGES PER ASME Y14.5M 1994
MATERIAL:
HEAT TREAT:
DESCRIPTION: INSTALLATION ASD12L
DATE: 5/2/2017
SCALE: 1:4
DRAWN BY: DJM
CHECKED BY: JMF
APPROVED BY: JMF
DWG SIZE: A0
SHEET: 1 OF 2
REV: A
1017592G

NOTICE: THIS PRINT CONTAINS PROPRIETARY INFORMATION AND IS NOT TO BE USED FOR ANY PURPOSE EXCEPT THE INTEREST OF TWIN DISC, INCORPORATED
THIS NOTICE IS NOT INTENDED TO REALIZE OF ANY RIGHTS GRANTED TO THE U.S. GOVERNMENT OR OTHERS BY CONTRACT.

1025420W Rev. A

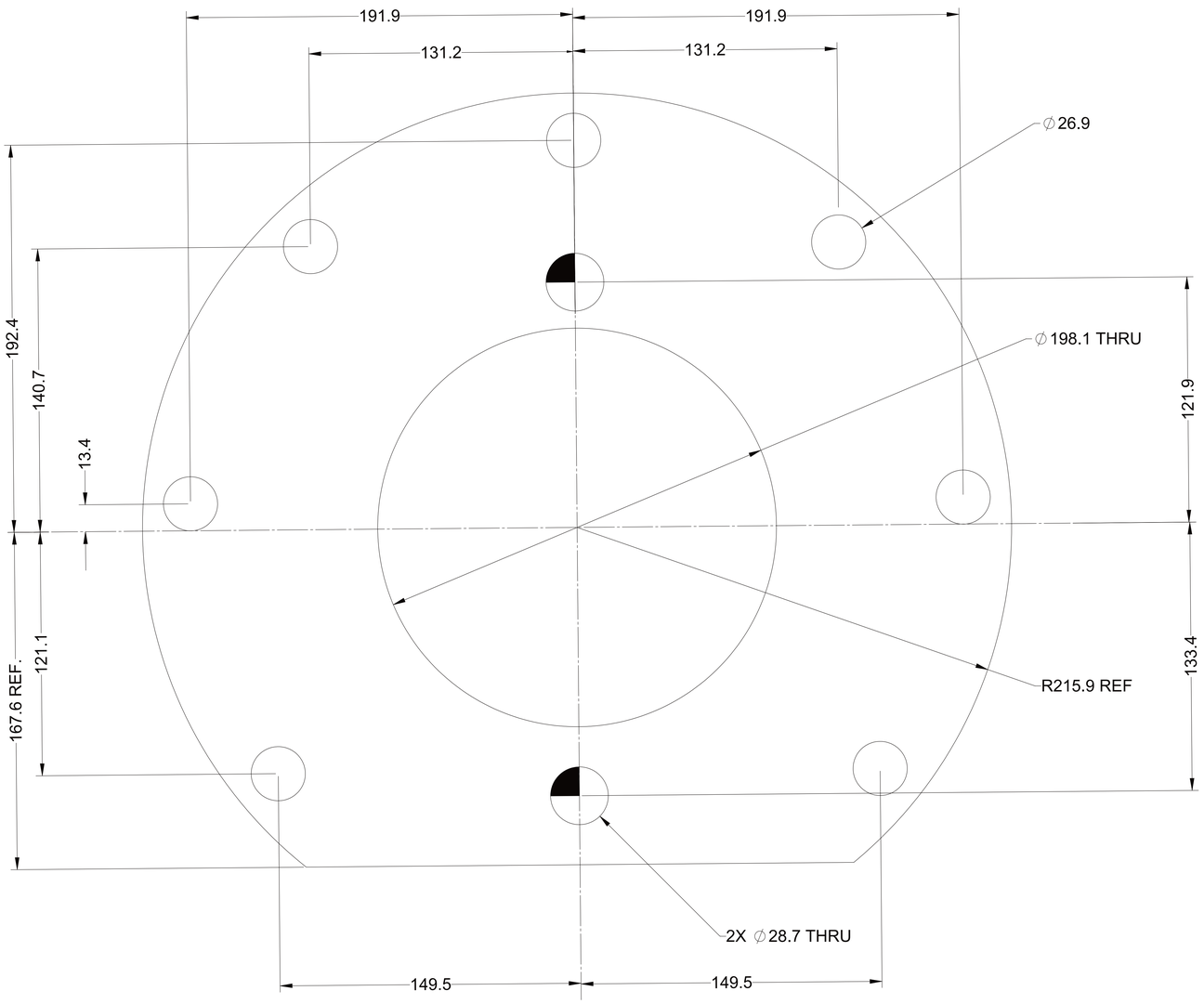

DRIVE OUTLINE

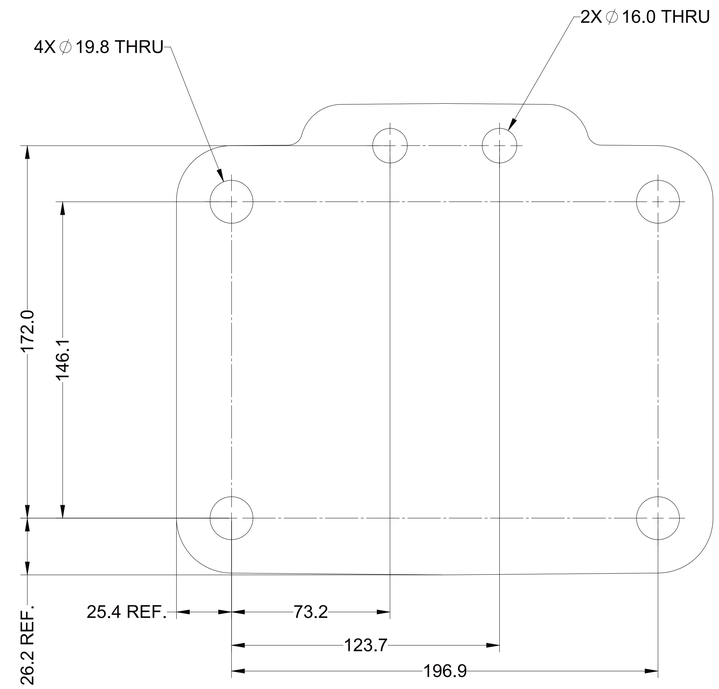

TRIM BRACKET OUTLINE

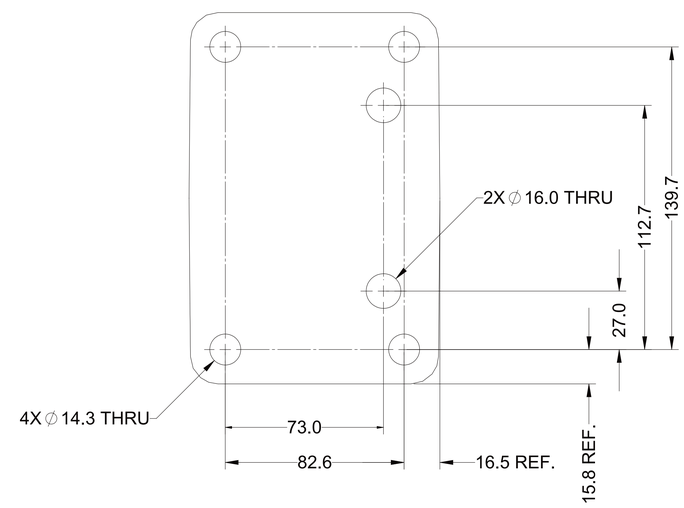

STEERING BRACKET OUTLINE

OBSOLETE. NOT FOR USE. (A)

REV	CHANGE NO.	DATE
A	ECNWF-100794	11/07/2019

FIRST USE ASSEMBLY:
FIRST USE MODEL: ASD-12L
SIMILAR TO: 1017592
WEIGHT: kg / lbs. kg-m²
METRIC
NOTICE: THIS PRINT CONTAINS PROPRIETARY INFORMATION AND IS NOT TO BE USED IN ANY MANNER DETRIMENTAL TO THE INTEREST OF TWIN DISC, INCORPORATED
THIS NOTICE MUST ACCOMPANY ANY REPRODUCTION GRANTED TO THE U.S. GOVERNMENT OR OTHERS BY CONTRACT.
THIRD ANGLE PROJECTION
UNLESS OTHERWISE SPECIFIED MACHINED DIMENSIONS
±X.XX ±0.78
X.XX ±0.25
X.XXX ±0.13
ALL ANGULAR TOLERANCES ±1° GEOMETRIC TOLERANCING PER ASME Y14.5M 1994
MATERIAL:
HEAT TREAT:
DESCRIPTION: INSTALLATION ASD12L
DATE: 5/2/2017
SCALE: 1:1
DRAWN BY: DJM
CHECKED BY: JMF
APPROVED BY: JMF
TWIN DISC
RACINE, WI 53403 - USA
1017592G
DWG SIZE: A0
SHEET: 2 OF 2
REV: A
102542DW Rev. A