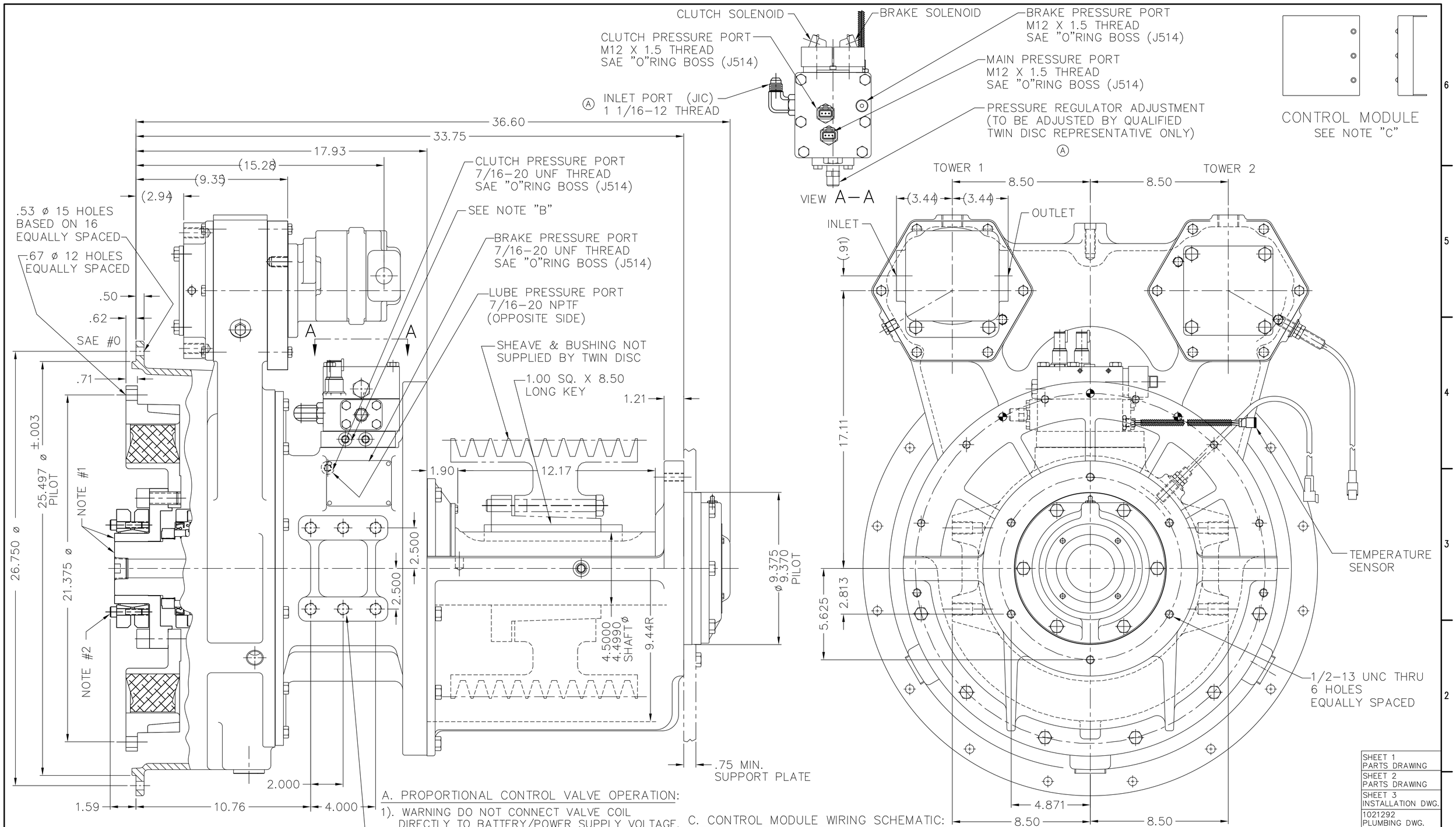

NOTES :
1. COUPLING TO BE INSTALLED WITH LOCKING COLLAR FACE FLUSH WITH SHAFT FACE.
2. TORQUE M10 SCREWS TO 51 LB-FT

3/4-10 UNC 1.25 DEEP
6 HOLES (BOTH SIDES)

A. PROPORTIONAL CONTROL VALVE OPERATION:
1). WARNING DO NOT CONNECT VALVE COIL DIRECTLY TO BATTERY/POWER SUPPLY VOLTAGE.
2). OPERATION TO BE PERFORMED WITH ONLY TWIN DISC CONTROL SYSTEMS OR MODULES.

B. PRESSURE REGULATOR ADJUSTMENT.
1). REMOVE CAP AND LOOSEN NUT.
2). CLOCKWISE ROTATION OF PISTON INCREASES PRESSURE. COUNTER CLOCKWISE DECREASES PRESSURE.

C. CONTROL MODULE WIRING SCHEMATIC:
1). REFER TO 1022469 FOR WIRING SCHEMATIC.
2). CONTROL MODULE TO BE MOUNTED IN ENVIORNMENT WITH AMBIENT TEMPERATURES LESS THAN 80°C.

MODEL: HP610S

SHEET 1	PARTS DRAWING
SHEET 2	PARTS DRAWING
SHEET 3	INSTALLATION DWG.
1021292	PLUMBING DWG.
1021295	PIPING DIAGRAM

UNLESS OTHERWISE SPECIFIED
MACHINED DIMENSIONS
X.X ±0.030
X.XX ±0.010
X.XXX ±0.005
ALL ANGULAR TOLERANCES ±1°
GEOMETRIC TOLERANCING
PER ASME Y14.5M 1994

WEIGHT LBS. | WR² LBS./IN² | FIRST USE ASSY. MODEL

NOTICE! THIS PRINT CONTAINS PROPIETARY INFORMATION AND IS NOT TO BE USED IN ANY MANNER DETRIMENTAL TO THE INTEREST OF TWIN DISC, INCORPORATE
THIS NOTICE IS NOT INTENDED TO NULLIFY OR LIMIT RIGHTS GRANTED TO THE U.S. GOVERNMENT OR OTHERS BY CONTRACT.

INCH
THIRD ANGLE PROJECTION

MATERIAL
SIMILAR TO 1024391C
HEAT TREAT
NAME HYDRAULIC PTO

DATE 03/01/10
SCALE 3/8
DRN. JBM
CHK. ZAP
APPD. GEM

TWIN DISC
INCORPORATED
RACINE, WI 53403 - USA

1025268C

DWG SIZE D | SHT. 3 of 3 | REV B