1 INPUT GROUP REFERENCE PLANE

2 PTO ADAPTER MOUNTING FACE

5 LEFT MOUNTING BRACKET FACE

6 RIGHT MOUNTING BRACKET FACE

NOTES:

A. PROPORTIONAL CONTROL VALVE OPERATION
1. WARNING DO NOT CONNECT VALVE COIL DIRECTLY TO BATTERY/POWER SUPPLY VOLTAGE.
2. OPERATION TO BE PERFORMED WITH ONLY TWIN DISC CONTROL SYSTEMS OR MODULES.

B. MANUAL DIRECTIONAL CONTROL VALVE OPERATION
1. WITH MANUAL DIRECTIONAL CONTROL VALVE IN CENTERED POSITION, PUSH TO ENGAGE SECONDARY CLUTCH.
2. WITH MANUAL DIRECTIONAL CONTROL VALVE IN CENTERED POSITION, PULL TO ENGAGE PRIMARY CLUTCH.

C. MANUAL DIRECTIONAL CONTROL VALVE MODE SWITCH
1. SWITCH IS NORMALLY CLOSED WHEN MANUAL DIRECTIONAL CONTROL VALVE IS IN THE CENTERED POSITION AND OPEN WHEN LEVER IS ACTUATED FROM CENTERED POSITION.
2. CURRENT = 20 AMP MAX.
3. FOR WIRING SCHEMATIC, REFER TO CONTROL MODULE DRAWING.

D. REFERENCE S930 FOR TWIN DISC REQUIREMENTS FOR PRESSURE AND TEMPERATURE ALARM LEVELS.

E. ALL POINTS AVAILABLE FOR TESTING ARE CODED ⬡.

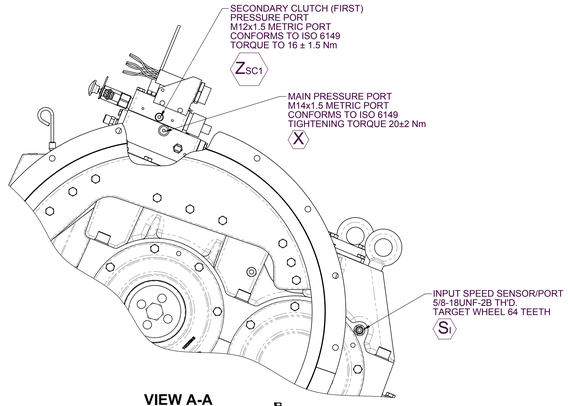

VIEW A-A

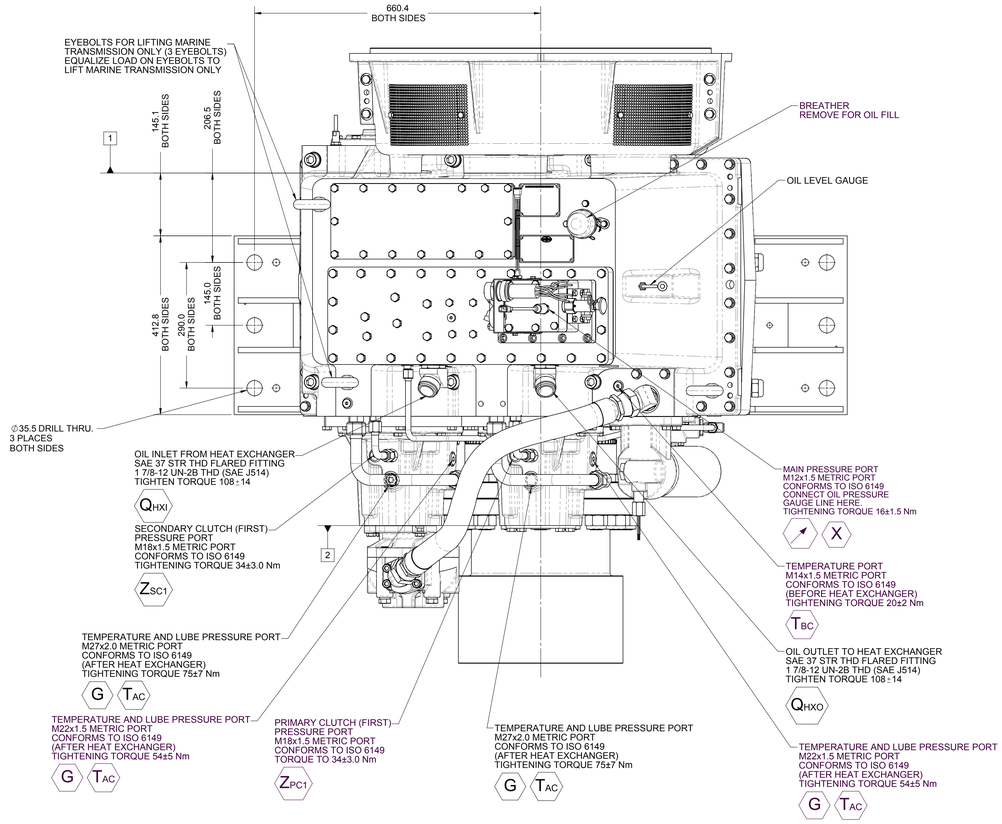

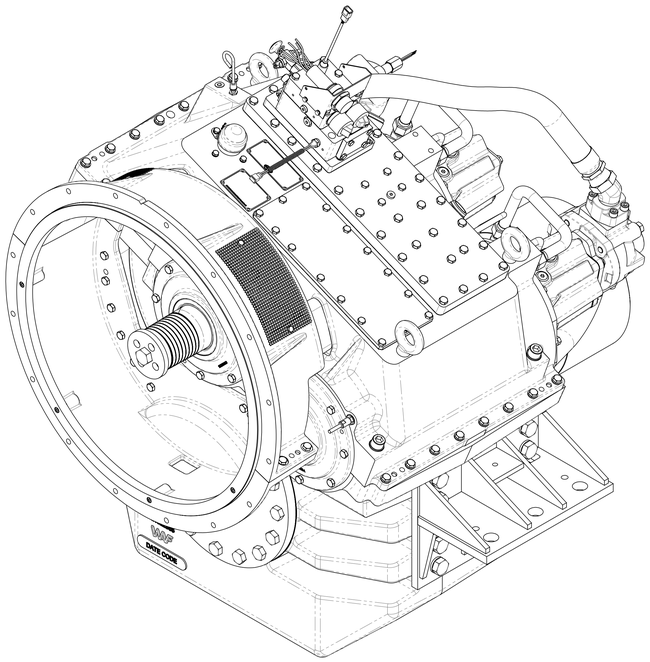

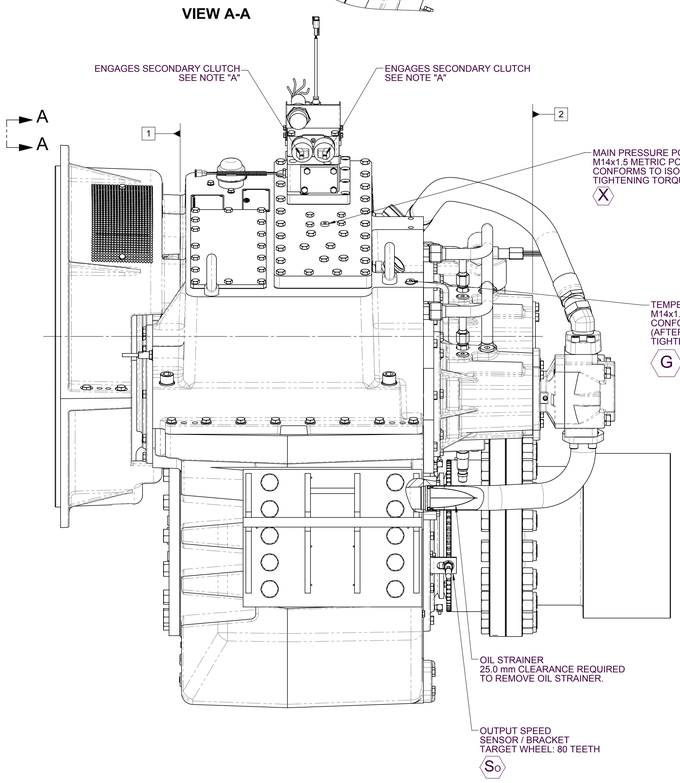

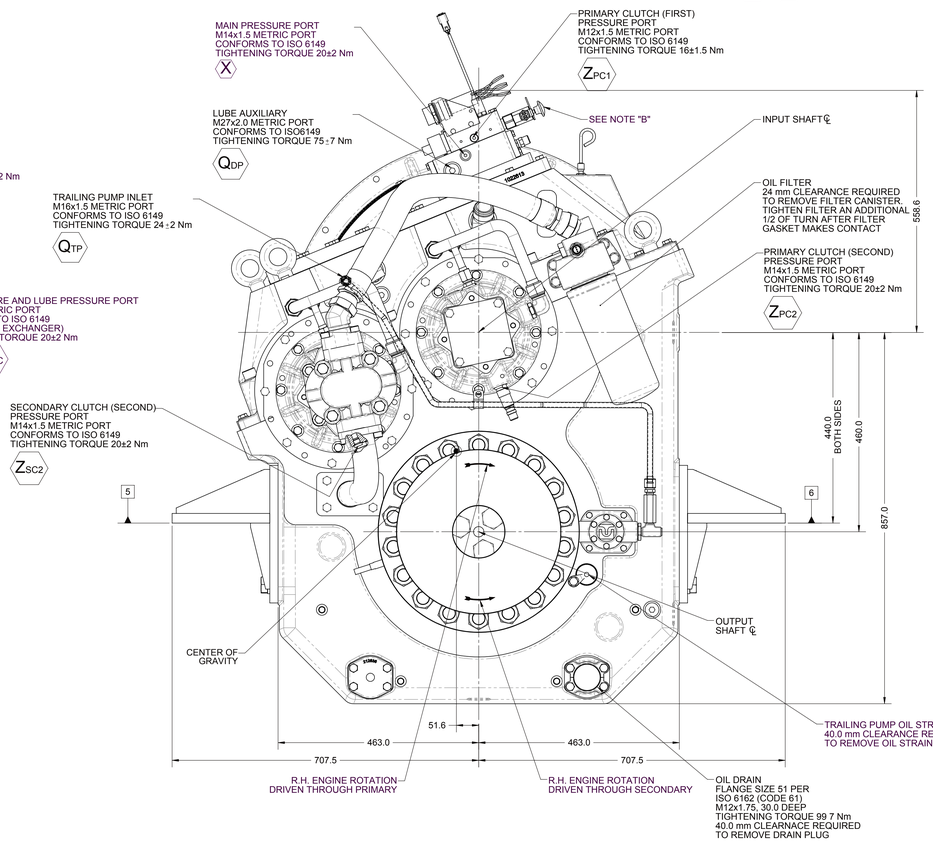

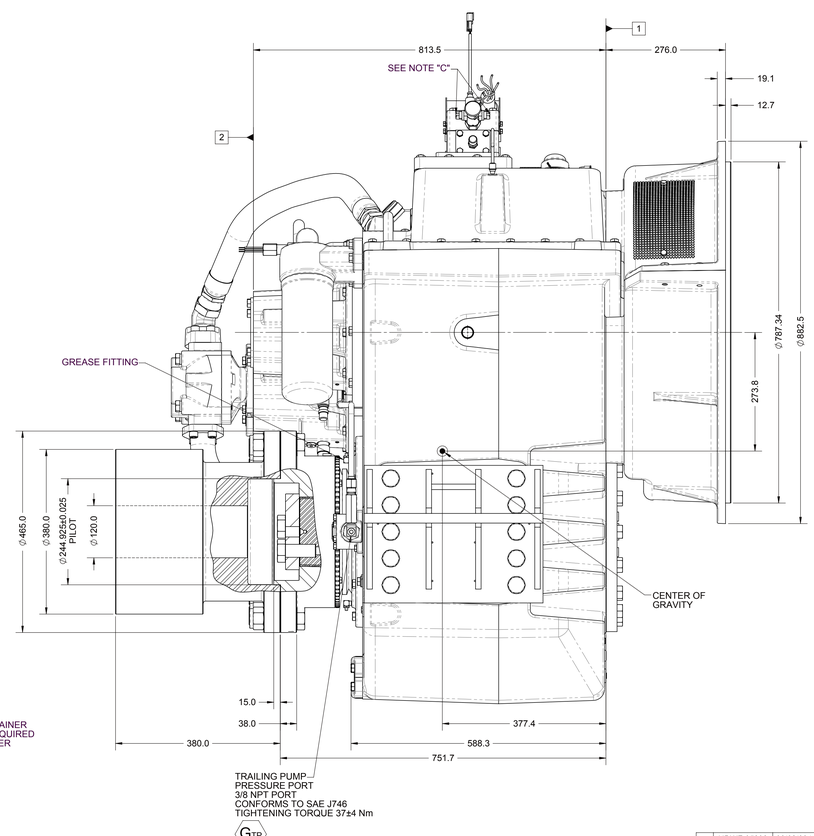

EQUIPMENT SHOWN:
- MGX-61500SC PER 1024500 ASSEMBLY
- SAE #00 LESS COUPLING
- GP VALVE WITH EC300 HARNESS
- TRAILING PUMP
- 1016428BR MOUNTING BRACKET
- 1015525B OUTPUT FLANGE
- 1018650 COMPANION FLANGE

FIRST USE ASSEMBLY: 1024500 FIRST USE MODEL: MGX-61500SC SIMILAR TO:	WEIGHT: 2348.19 lb / kg	THIRD ANGLE PROJECTION	MATERIAL:	DATE: 07/24/2014 SCALE: 1:5	TWIN DISC RACINE, WI 53403 - USA
METRIC	UNLESS OTHERWISE SPECIFIED MACHINED DIMENSIONS X.X ±0.25 X.XX ±0.10 X.XXX ±0.05 ALL ANGULAR TOLERANCING ±1° GEOMETRIC TOLERANCING PER ASME Y14.5M 1994		HEAT TREAT:	DRAWN BY: PM CHECKED BY: ALC	1025454D
NOTICE: THIS PRINT CONTAINS PROPRIETARY INFORMATION AND IS NOT TO BE USED IN ANY MANNER DETRIMENTAL TO THE INTEREST OF TWIN DISC, INCORPORATED THIS NOTICE IS NOT TO BE REMOVED OR COVERED UP. ALL RIGHTS GRANTED TO THE U.S. GOVERNMENT OR OTHERS BY CONTRACT.			DESCRIPTION: INSTALLATION MGX-61500SC	APPROVED BY: ALC	DWG SIZE: A0 / SHEET: 1 OF 1 / REV: -

REV	CHANGE NO.	DATE
-	NDWF-05232	08/22/2014

1025420W Rev -