1 INPUT GROUP REFERENCE PLANE

2 PTO ADAPTER MOUNTING FACE

3 LEFT BRACKET MOUNTING FACE

4 RIGHT BRACKET MOUNTING FACE

5 LIVE PTO PUMP MOUNTING FACE

NOTES:

A. MANUAL OVERRIDE VALVE OPERATION
   1. THE MANUAL OVERRIDE FEATURE FOR THE PRIMARY AND SECONDARY SOLENOIDS MUST NEVER BE ENGAGED SIMULTANEOUSLY.
   2. THE MANUAL OVERRIDE BUTTON FOR BOTH THE PRIMARY AND SECONDARY SOLENOIDS MUST BE IN THE NEUTRAL POSITION TO OPERATE EITHER SOLENOID ELECTRICALLY.
   3. TO ENGAGE PRIMARY CLUTCH USING THE MANUFAL OVERIDE
      a. REMOVE PROTECTIVE CAP FROM THE PRIMARY SOLENOID
      b. PUSH BUTTON DOWN
      c. CONTINUE TO PUSH BUTTON AND ROTATE CLOCKWISE 180°
      d. RELEASE BUTTON
   4. TO ENGAGE SECONDARY CLUTCH USING THE MANUFAL OVERIDE
      a. REMOVE PROTECTIVE CAP FROM THE SECONDARY SOLENOID
      b. PUSH BUTTON DOWN
      c. CONTINUE TO PUSH BUTTON AND ROTATE CLOCKWISE 180°
      d. RELEASE BUTTON
   5. TO RETURN EITHER OF THE PRIMARY OR SECONDARY MANUAL OVERRIDE TO THE NEUTRAL POSITION:
      a. PUSH BUTTON DOWN
      b. CONTINUE TO PUSH BUTTON AND ROTATE COUNTER-CLOCKWSE 180°
      c. RELEASE BUTTON
      d. INSTALL PROTECTIVE CAP OVER THE MANUAL OVERRIDE BUTTON

B. REFERENCE S930 FOR TWIN DISC REQUIREMENTS FOR PRESSURE AND TEMPERATURE ALARM LEVELS.

WIRING DIAGRAM :

TERMINAL 1 :+ VDC

TERMINAL 2 :0 VDC

TERMINAL 3 :GROUND

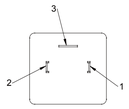

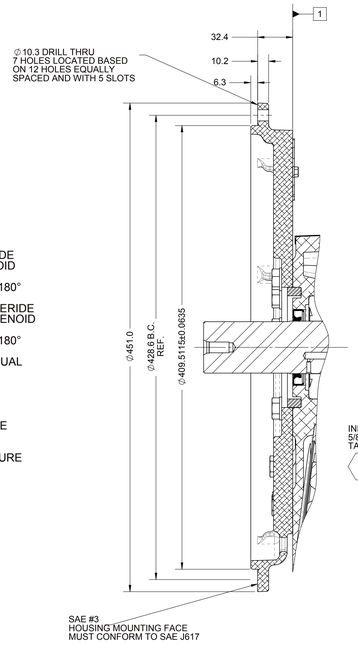

SECTION B-B

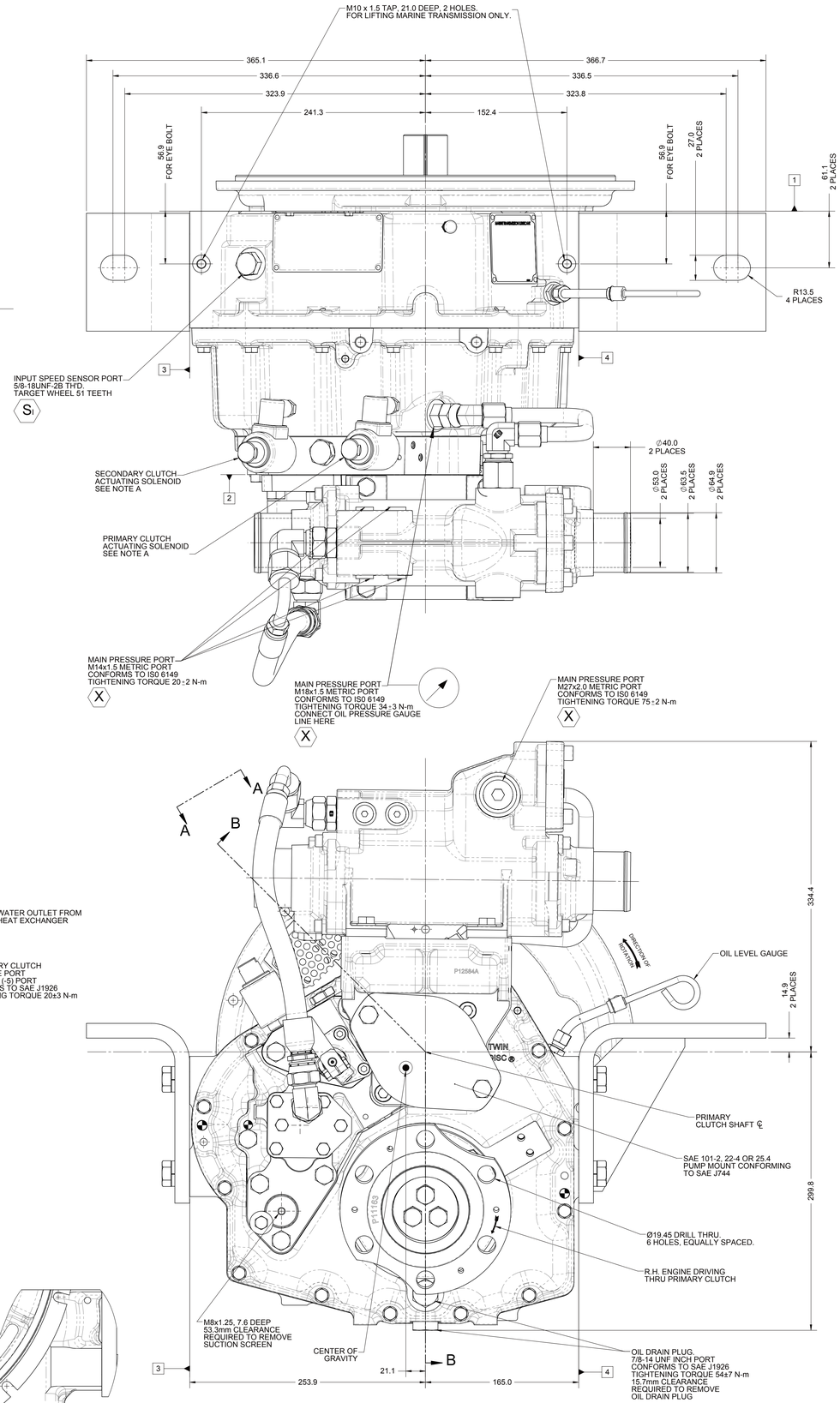

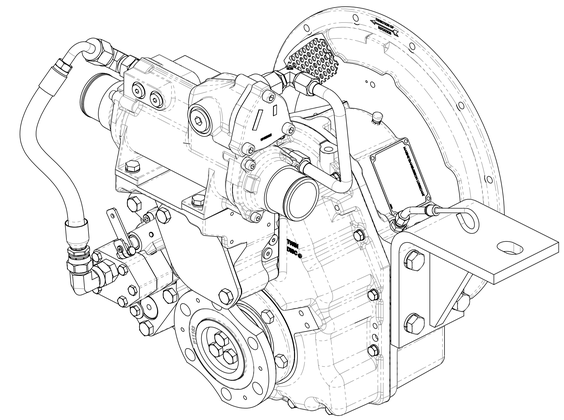

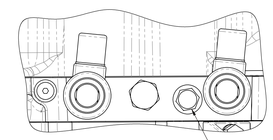

VIEW A-A

OIL FILL PORT
M22X1.5 METRIC PORT
TIGHTENING TORQUE 54±5 N-m

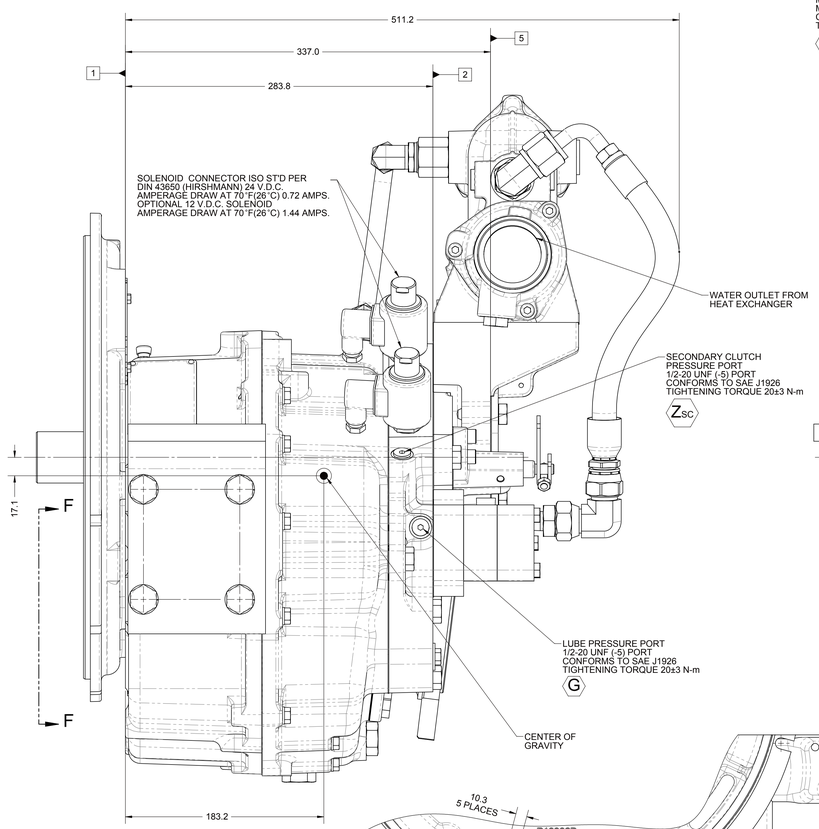

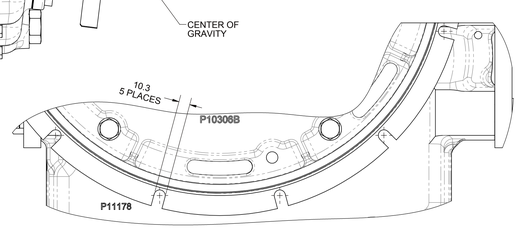

SECTION F-F

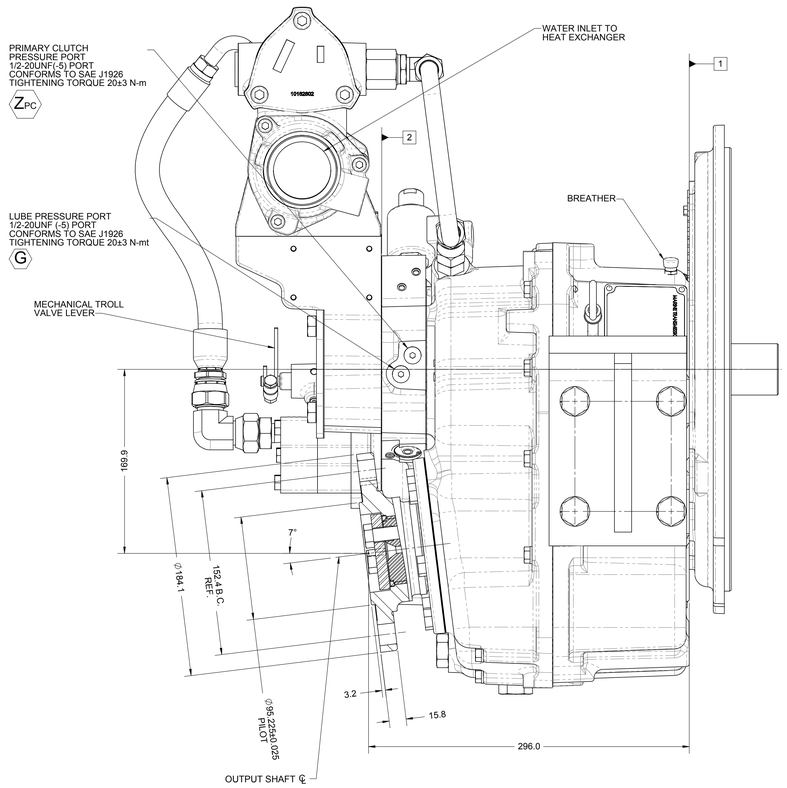

EQUIPMENT SHOWN:
- MG-5065A PER PX11165B ASSEMBLY
- ELECTRICAL CONTROL VALVE WITH MECHANICAL TROLLING VALVE
- SAE #3 HOUSING ADAPTER
- SAE J744 101-2/4, 22-4 OR 25-4 LIVE PTO HOUSING ADAPTER
- PM13008 MOUNTED HEAT EXCHANGER
- 1016428AW MOUNTING BRACKET

REV	CHANGE NO	DATE
-	NDWF-75035	04/30/2014

FIRST USE ASSEMBLY: PX11165B
FIRST USE MODEL: MG-5065A
SIMILAR TO:
WEIGHT: 157.79 lbs / kg
THIRD ANGLE PROJECTION
METRIC
UNLESS OTHERWISE SPECIFIED MACHINED DIMENSIONS X ±0.05, X.X ±0.25, X.XX ±0.13, ALL ANGULAR TOLERANCES ±1°, GEOMETRIC TOLERANCING PER ASME Y14.5M 1994
MATERIAL:
HEAT TREAT:
DESCRIPTION: INSTALLATION MG-5065A
DATE: 04/25/2014
SCALE: 1:2
DRAWN BY: PM
CHECKED BY: ALC
APPROVED BY: ALC
DWG SIZE: A0
SHEET: 1 OF 1
REV: -

TWIN DISC
RACINE, WI 53403 - USA

1026552B

NOTICE: THIS PRINT CONTAINS PROPRIETARY INFORMATION AND IS NOT TO BE USED FOR ANY PURPOSE OTHER THAN THE INTERESTS OF TWIN DISC, INCORPORATED
THIS NOTICE IS NOT INTENDED TO FALSIFY 17 USC §401 RIGHTS GRANTED TO THE U.S. GOVERNMENT OR OTHERS BY CONTRACT.