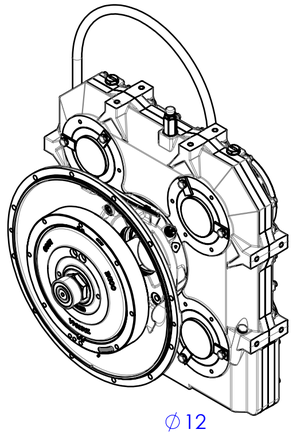

GENERAL NOTES
a.) REFER TO PRODUCT LIST WHEN ORDERING PARTS
b.) REFER TO CARE & OPERATION MANUAL FOR ADDITIONAL INFO
c.) REFER TO PIPING DRAWING 1029340F FOR HYDRAULIC CONNECTIONS

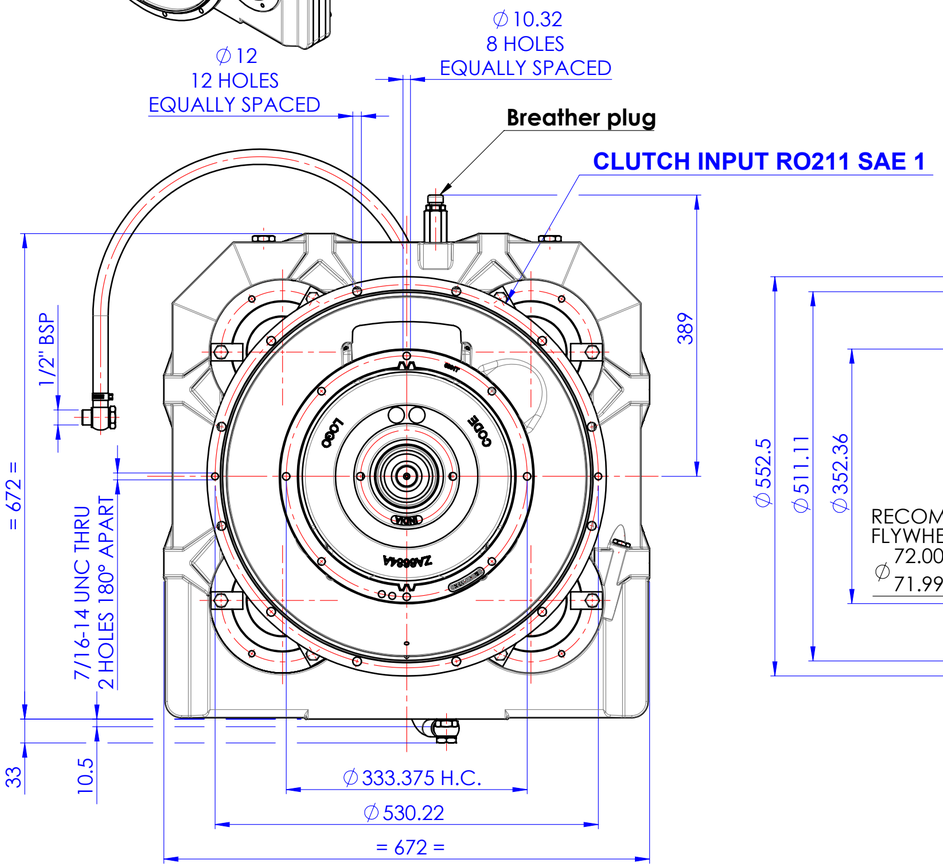

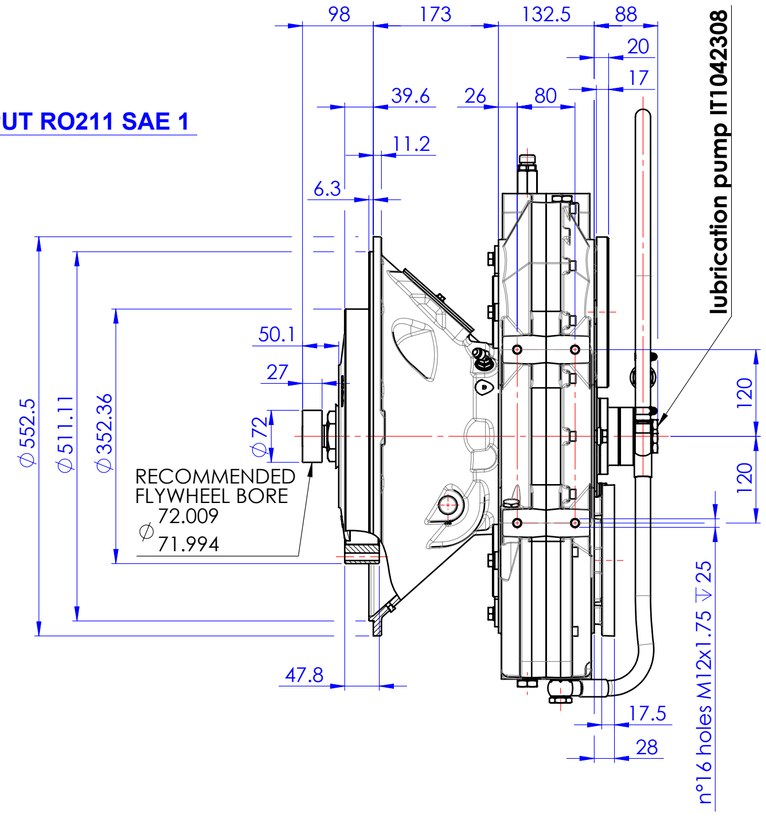

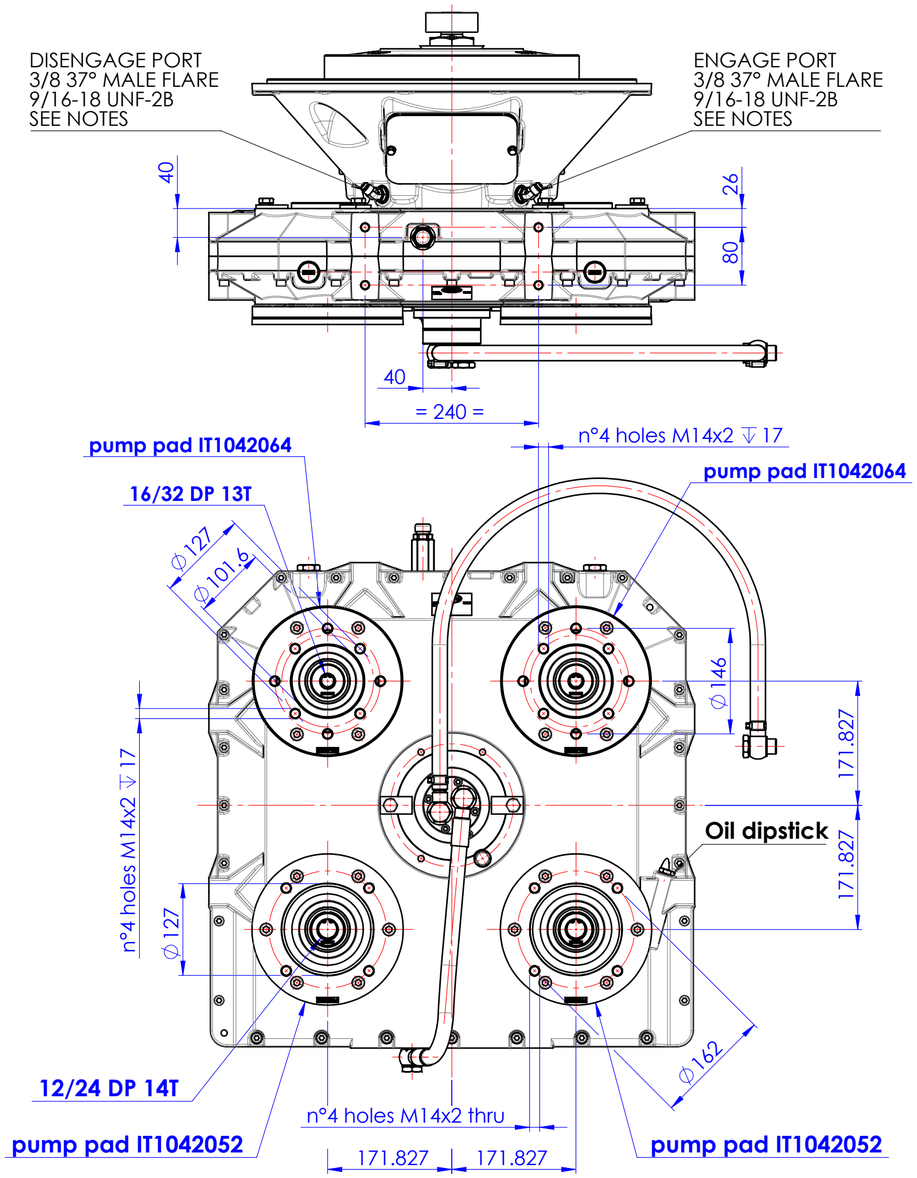

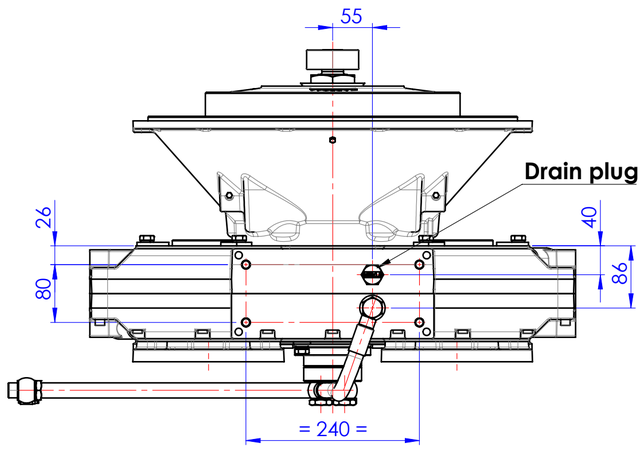

Drawing and 3D model are valid for all ratios

PRIMO UTILIZZO MONTAGGIO/FIRST USE ASSEMBLY: PRIMO IMPIEGO MODELLO/FIRST USE MODEL: SIMILE A/SIMILAR TO:	MODELLO / MADE FROM:	MATERIALE / MATERIAL:		DATA / DATE: 03/06/2018	- | NDWF-4000383 | 03/26/2018
METRIC	PESO WEIGHT: kg WR^2 : kg-m^2	TRATT. TERMICO / HEAT TREAT:	TRATT. SUP. / SURFACE TREATMENT:	SCALA / SCALE: 1:6	INDIC MODIF/ REV: | MODIFICA / CHANGE NO. | DATA / DATE
NOTICE! THIS PRINT CONTAINS PROPRIETARY INFORMATION AND IS NOT TO BE USED IN ANY MANNER DETRIMENTAL TO THE INTEREST OF **TWIN DISC, INCORPORATED** THIS NOTICE IS NOT INTENDED TO NULLIFY OR LIMIT RIGHTS GRANTED TO THE U.S. GOVERNMENT OR OTHERS BY CONTRACT.	TOLL. GEN. DILAVORAZIONE H13 FORO - h13 ALBERO j_s14 DIMENSIONI LINEARI ∢: 15'fino ∅200 ∢: 10'fino ∅500	DESCRIZIONE: INGOMBRO AM450 BOM 1028865N	DESCRIPTION: INSTALLATION PUMP DRIVE AM450 BOM 1028865N	DIS / DRAWN: PR VERIF. / CHECK: GG APPROVATO/APP: DAJ	TWIN DISC. DECIMA - ITALY 1028864M FORMATO / SIZE: A2 | FOGLIO / SHEET: 1 OF 1 | INDIC MODIF/ REV: -

THIRD ANGLE PROJECTION

1025420W Rev. A