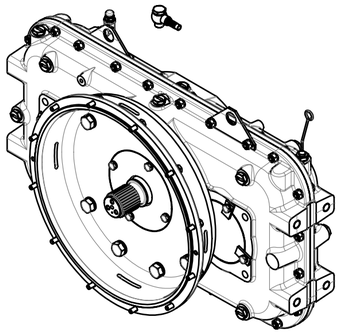

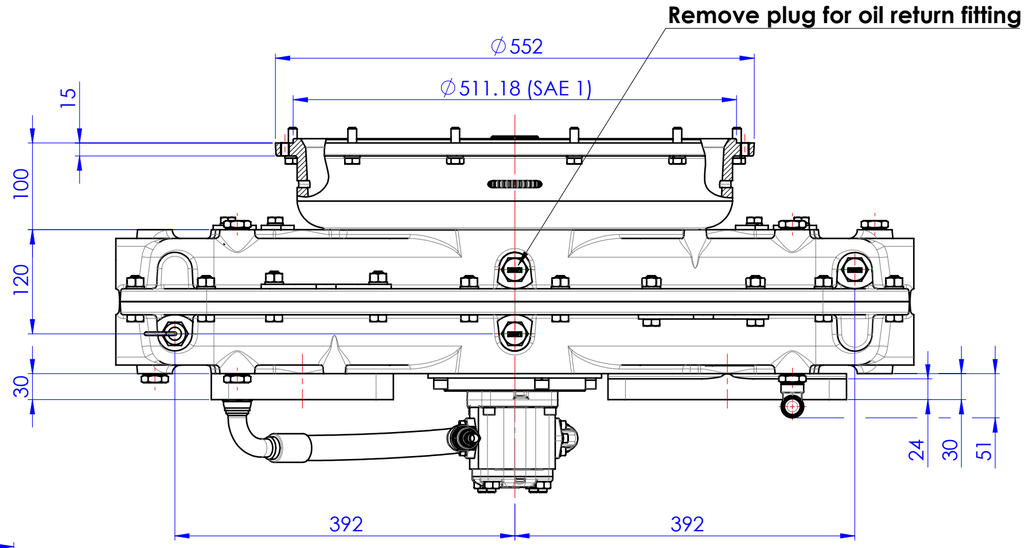

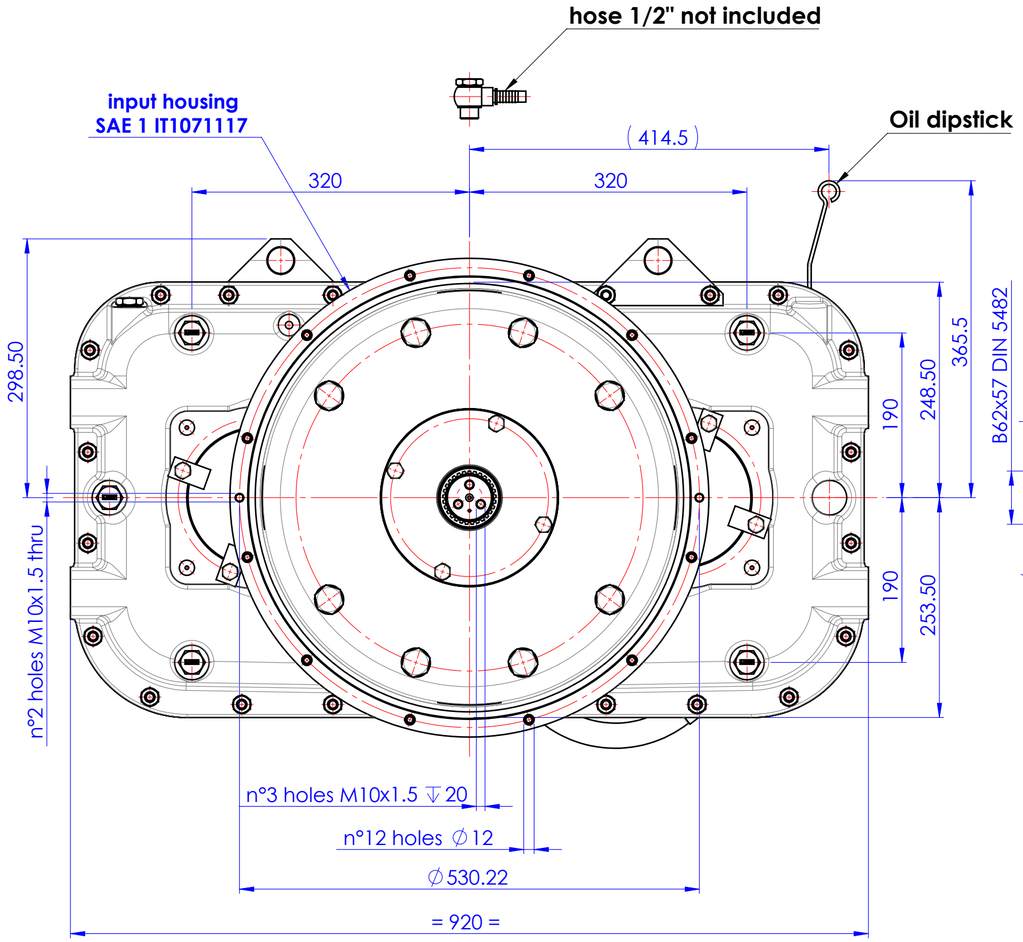

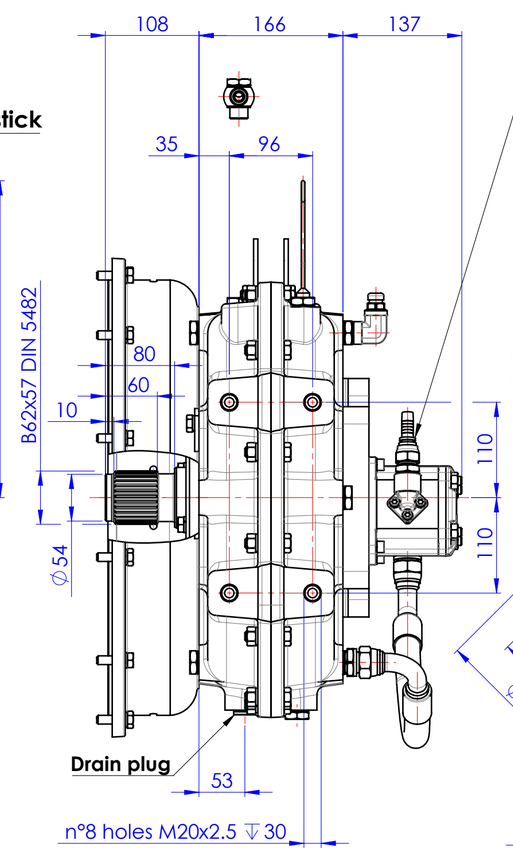

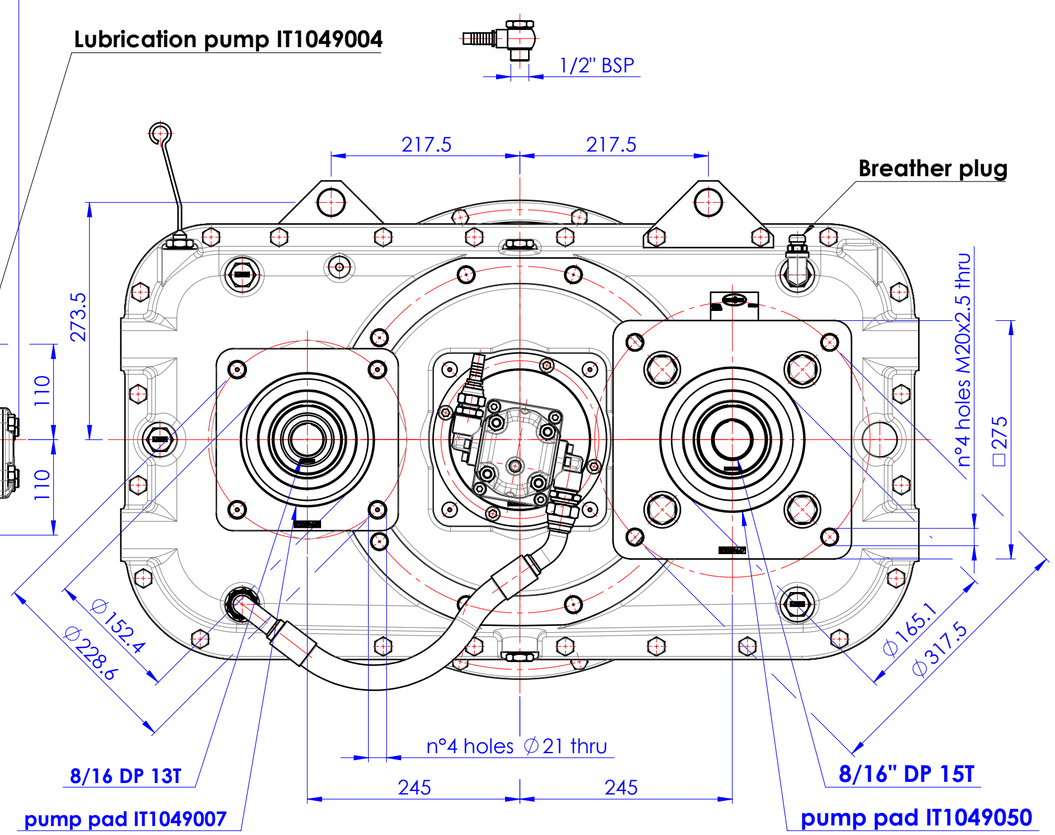

Drawing and 3D model are valid for ratios: 1.00 - 0.92 - 0.80 - 0.70

PRIMO UTILIZZO MONTAGGIO/FIRST USE ASSEMBLY: PRIMO IMPIEGO MODELLO/FIRST USE MODEL: SIMILE A/SIMILAR TO:	MODELLO / MADE FROM:	MATERIALE / MATERIAL:		DATA / DATE: 24/10/2017	- | NDWF-4000313 | 27/10/2017
METRIC	PESO WEIGHT: kg WR^2 : kg-m²	TRATT. TERMICO / HEAT TREAT:	TRATT. SUP. / SURFACE TREATMENT:	SCALA / SCALE: 1:5	INDIC. MODIF/ REV. | MODIFICA / CHANGE NO. | DATA / DATE
NOTICE! THIS PRINT CONTAINS PROPRIETARY INFORMATION AND IS NOT TO BE USED IN ANY MANNER DETRIMENTAL TO THE INTEREST OF **TWIN DISC, INCORPORATED** THIS NOTICE IS NOT INTENDED TO NULLIFY OR LIMIT RIGHTS GRANTED TO THE U.S. GOVERNMENT OR OTHERS BY CONTRACT.	THIRD ANGLE PROJECTION	TOLL. GEN. DILAVORAZIONE H13 FORO - h13 ALBERO j_s14 DIMENSIONI LINEARI ⊣ 15'fino ∅200 ⊣ 10'fino ∅500	DESCRIZIONE: INGOMBRO AM270 BOM 1028878E	DESCRIPTION: INSTALLATION PUMP DRIVE AM270 BOM 1028878E	DIS / DRAWN: PR VERIF. / CHECK: GG APPROVATO/APP: GG

TWIN DISC
DECIMA - ITALY

1028877E

FORMATO / SIZE: A2 | FOGLIO / SHEET: 1 OF 1 | INDIC MODIF/ REV: -

1025420W Rev. A