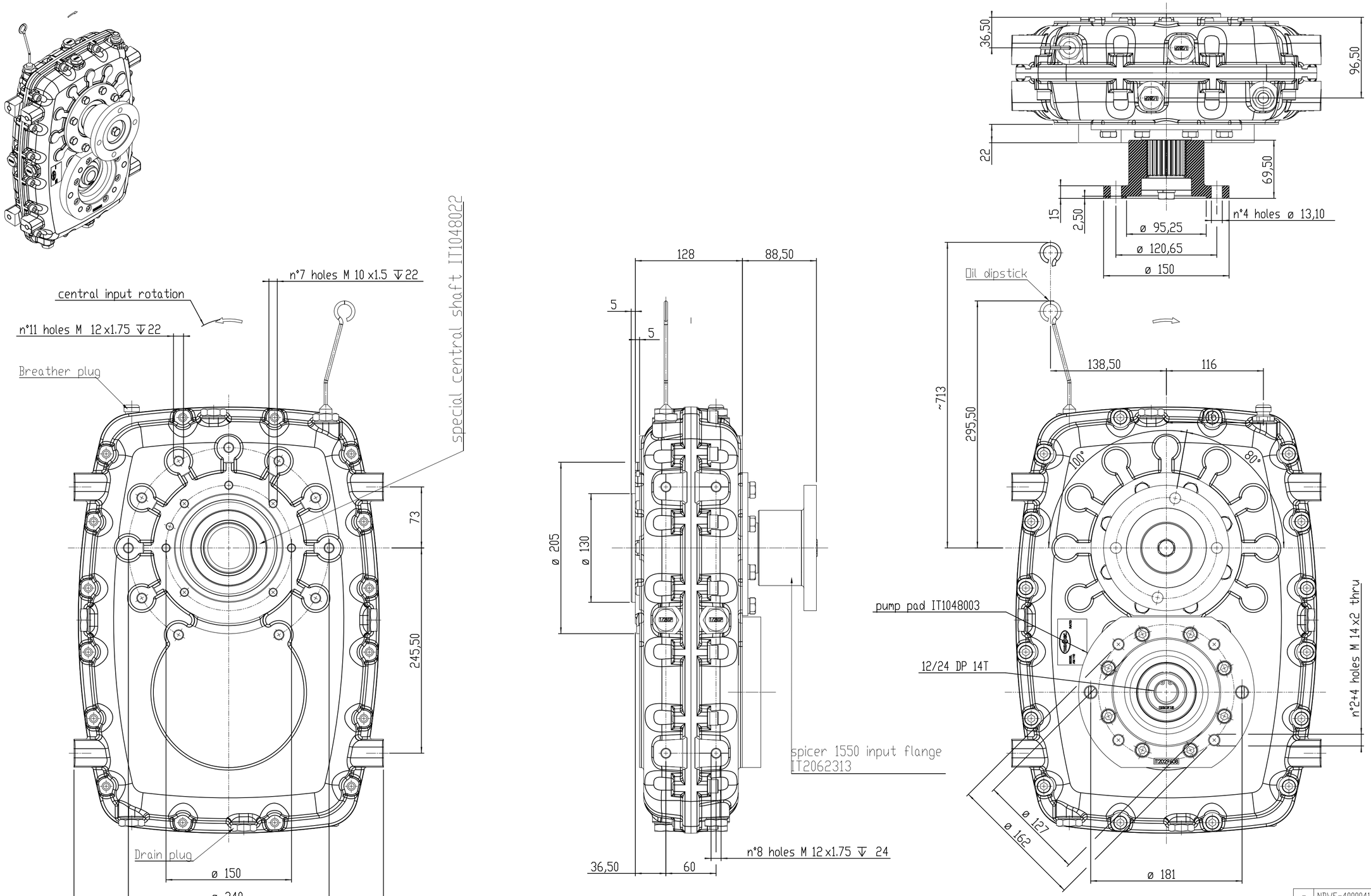

Drawing and 3D model are valid for all ratios

REV	CHANGE NO.	DATE
-	NDWF-4000041	18-03-16

FIRST USE ASSEMBLY:
FIRST USE MODEL:
SIMILAR TO:

WEIGHT: kg
Wt: ² kg-m²

THIRD ANGLE PROJECTION

METRIC

UNLESS OTHERWISE SPECIFIED
MACHINED DIMENSIONS
I ± 0.75
II ± 0.25
III ± 0.13
ALL ANGULAR TOLERANCES ±1°
GEOMETRIC TOLERANCING
PER ASME Y14.5M 1994

NOTICE: THIS PRINT CONTAINS PROPRIETARY INFORMATION AND IS NOT TO BE USED IN ANY MANNER DETRIMENTAL TO THE INTEREST OF TWIN DISC, INCORPORATED
THIS NOTICE IS NOT INTENDED TO NULLIFY OR LIMIT RIGHTS GRANTED TO THE U.S. GOVERNMENT OR OTHERS BY CONTRACT.

MATERIAL:
HEAT TREAT:
DESCRIPTION: Installation pump drive, AM 110 BOM n°1029010F

DATE: 23-Mar-16
SCALE: 1:3
DRAWN BY: Rosso
CHECKED BY: Guzzinati
APPROVED BY: Guzzinati

TWIN DISC
TWIN DISC SRL - ITALY

1029011E

DWG SIZE: A2
SHEET: 1 OF 1
REV: -

Format: A2-TAP-IT rev-