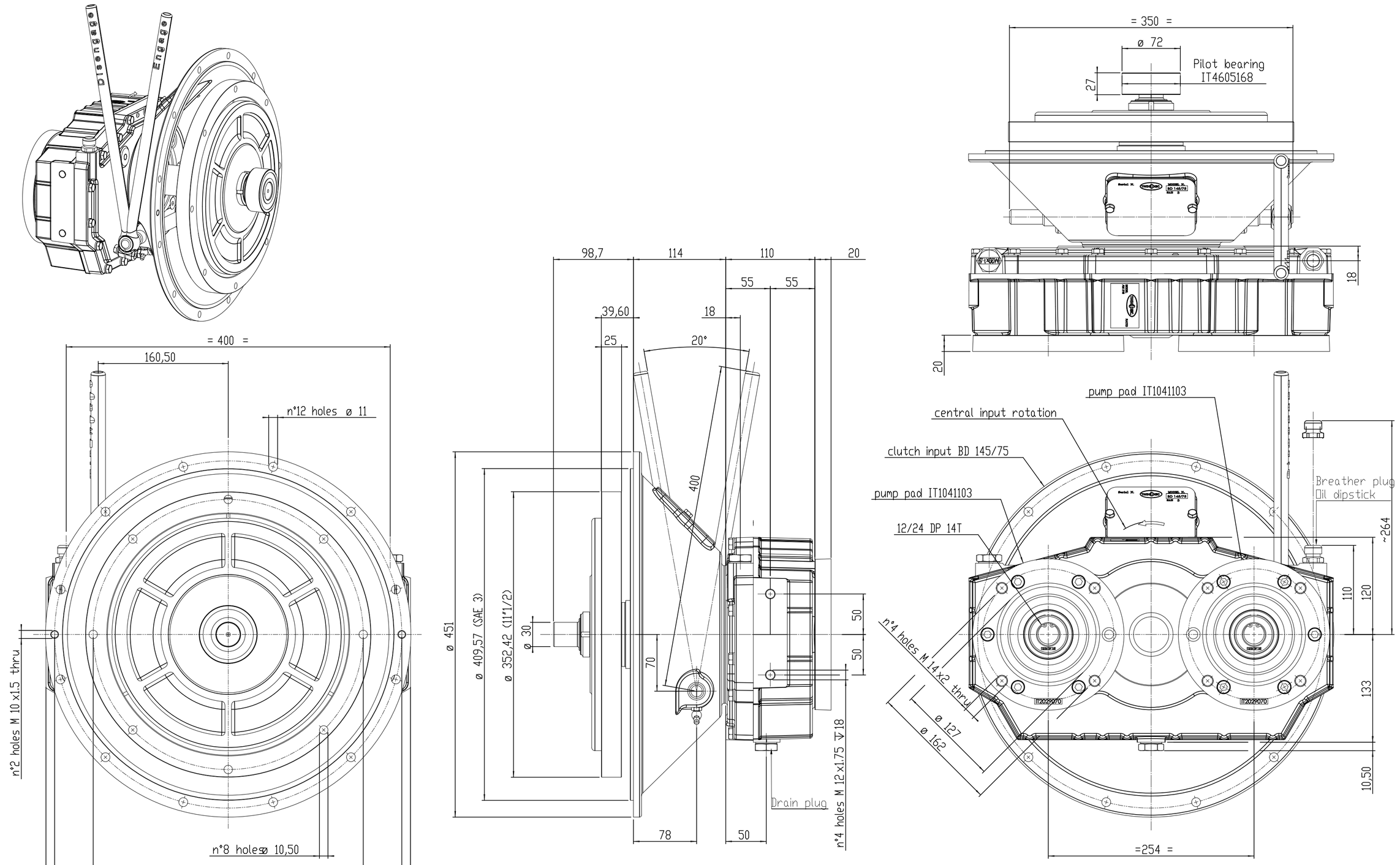

Drawing and 3D model are valid for all ratios

FIRST USE ASSEMBLY:	WEIGHT: kg	THIRD ANGLE PROJECTION	MATERIAL:	DATE: 10-Jun-15	- NDWF-06082 04-06-15
FIRST USE MODEL:	Wt: ² kg-m²		HEAT TREAT:	SCALE: 1:3	REV CHANGE NO. DATE
SIMILAR TO:				DRAWN BY: Rosso	TWIN DISC SRL - ITALY
METRIC		UNLESS OTHERWISE SPECIFIED MACHINED DIMENSIONS I ± 0.75 II ± 0.25 III ± 0.13 ALL ANGULAR TOLERANCES ±1° GEOMETRIC TOLERANCING PER ASME Y14.5M 1994	DESCRIPTION: Installation pump drive, AM 216 BOM n°1029012D	CHECKED BY: Guzzinati	1029013B
NOTICE: THIS PRINT CONTAINS PROPRIETARY INFORMATION AND IS NOT TO BE USED IN ANY MANNER DETRIMENTAL TO THE INTEREST OF TWIN DISC, INCORPORATED. THIS NOTICE IS NOT INTENDED TO NULLIFY OR LIMIT RIGHTS GRANTED TO THE U.S. GOVERNMENT OR OTHERS BY CONTRACT.				APPROVED BY: Guzzinati	DWG SIZE: A2 SHEET: 1 OF 1 REV: -

Format: A2-TAP-IT rev-