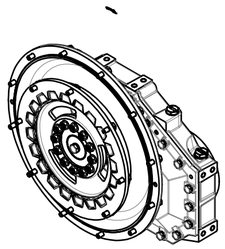

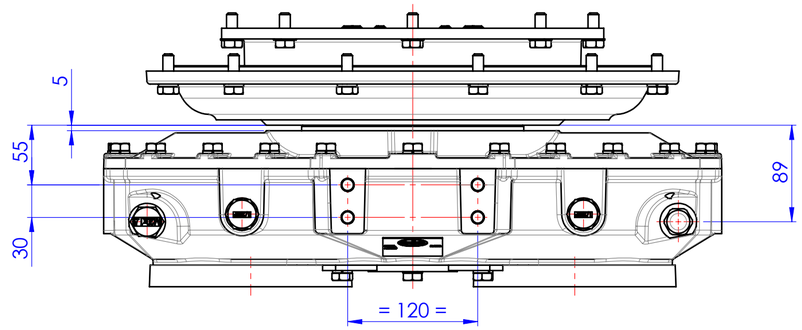

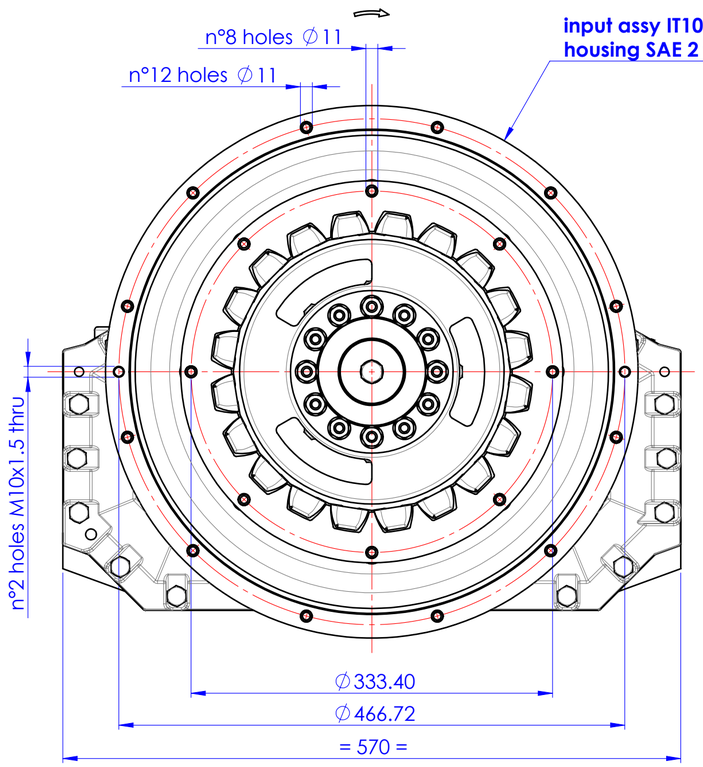

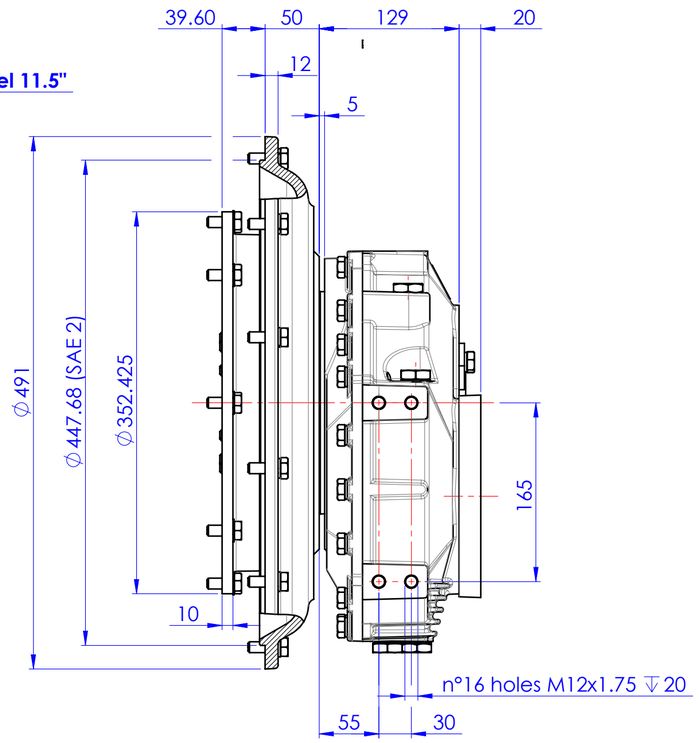

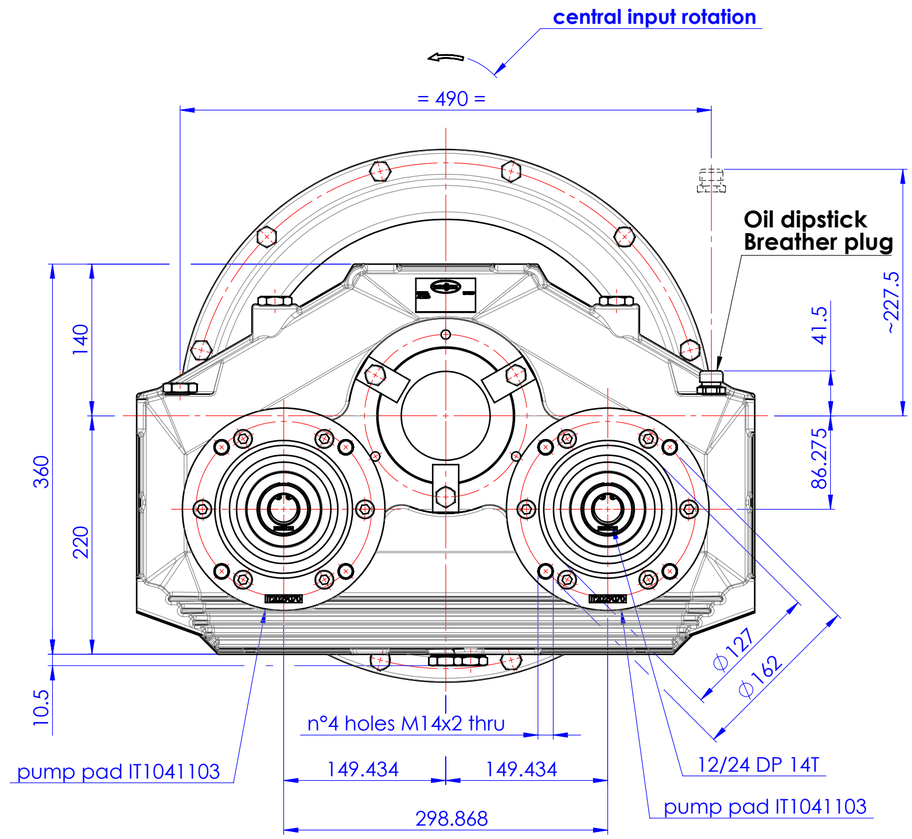

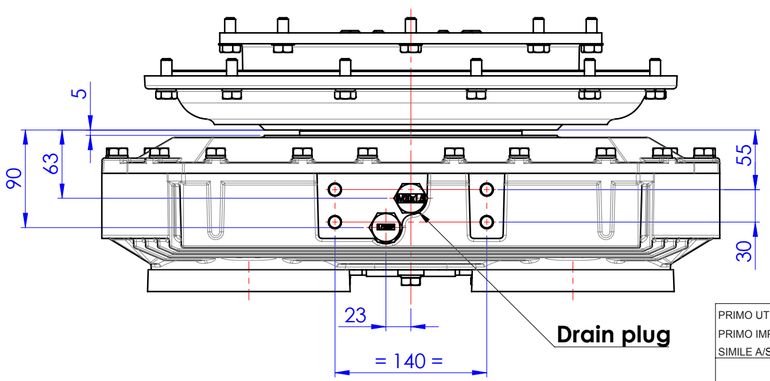

Drawing and 3D model are valid for all ratios

-	NDWF-010832	07/23/2019	1
INDIC MODIF/ REV:	MODIFICA / CHANGE NO.	DATA / DATE	

PRIMO UTILIZZO MONTAGGIO/FIRST USE ASSEMBLY:
PRIMO IMPIEGO MODELLO/FIRST USE MODEL:
SIMILE A/SIMILAR TO:

METRIC

NOTICE! THIS PRINT CONTAINS PROPRIETARY INFORMATION AND IS NOT TO BE USED IN ANY MANNER DETRIMENTAL TO THE INTEREST OF **TWIN DISC, INCORPORATED** THIS NOTICE IS NOT INTENDED TO NULLIFY OR LIMIT RIGHTS GRANTED TO THE U.S. GOVERNMENT OR OTHERS BY CONTRACT.

THIRD ANGLE PROJECTION

MODELLO / MADE FROM:
PESO / WEIGHT: kg
WR^2 : kg·m²
TOLL. GEN. DILAVORAZIONE H13 FORO - h13 ALBERO j_s14 DIMENSIONI LINEARI
15'fino ∅200 10'fino ∅500

MATERIALE / MATERIAL:
TRATT. TERMICO / HEAT TREAT:
TRATT. SUP. / SURFACE TREATMENT:
DESCRIZIONE: INGOMBRO AM220 BOM 45648
DESCRIPTION: INSTALLATION PUMP DRIVE AM220 BOM 45648

DATA / DATE: 07/23/2019
SCALA / SCALE: 1:4
DIS / DRAWN: PR
VERIF. / CHECK: GG
APPROVATO/APP: GG
FORMATO / SIZE: A2
FOGLIO / SHEET: 1 OF 1
INDIC MODIF/ REV: -

TWIN DISC
DECIMA - ITALY
1029015W

1025420W Rev. A