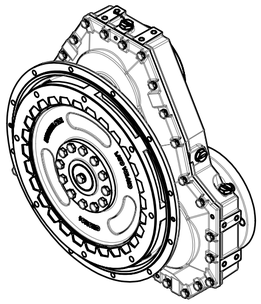

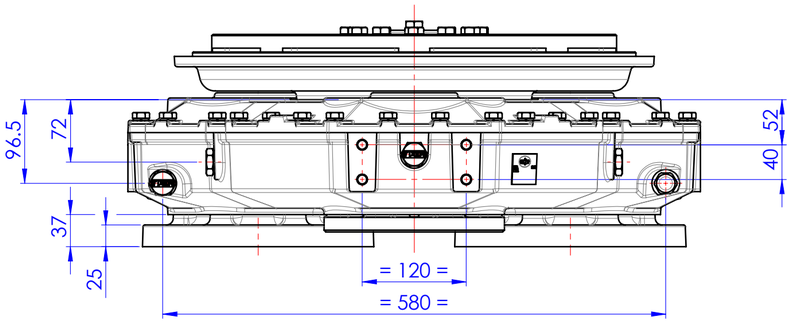

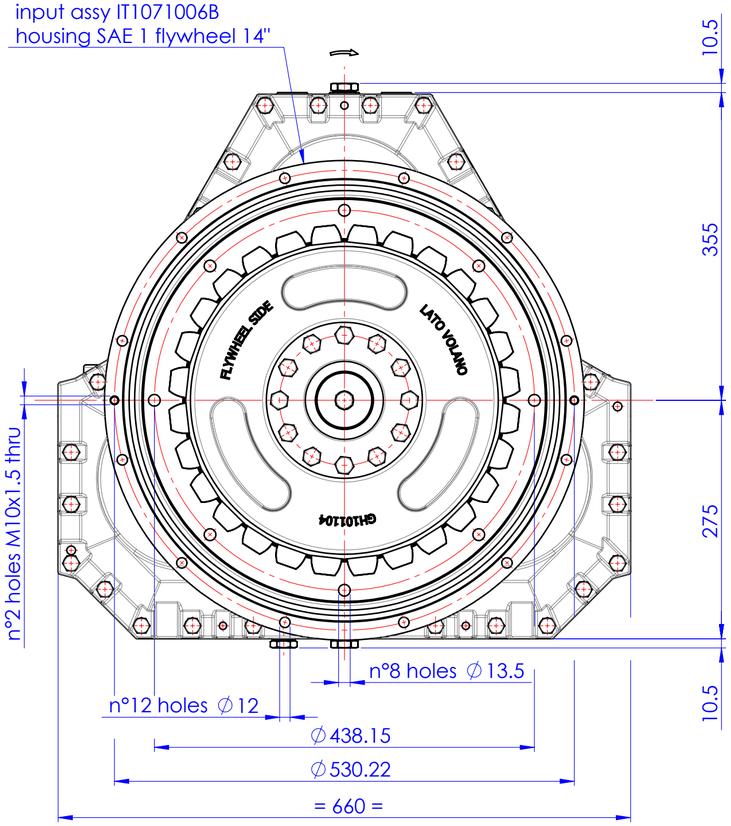

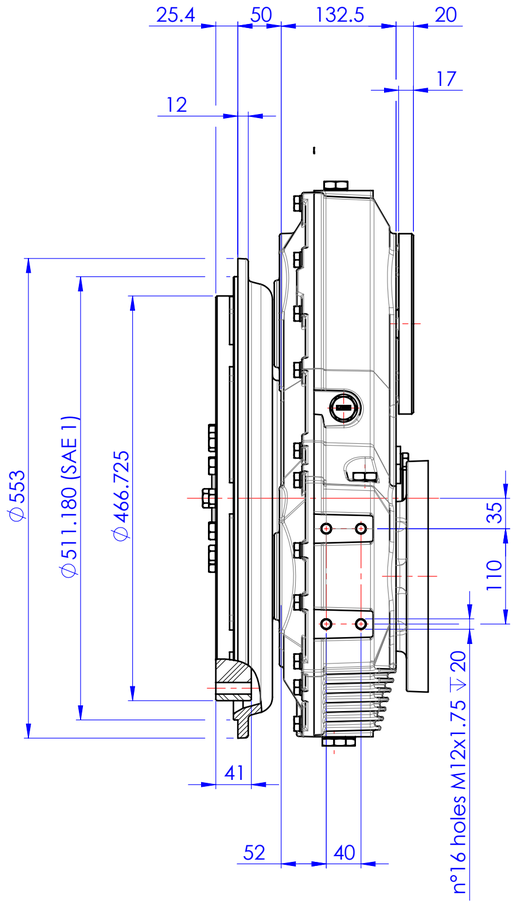

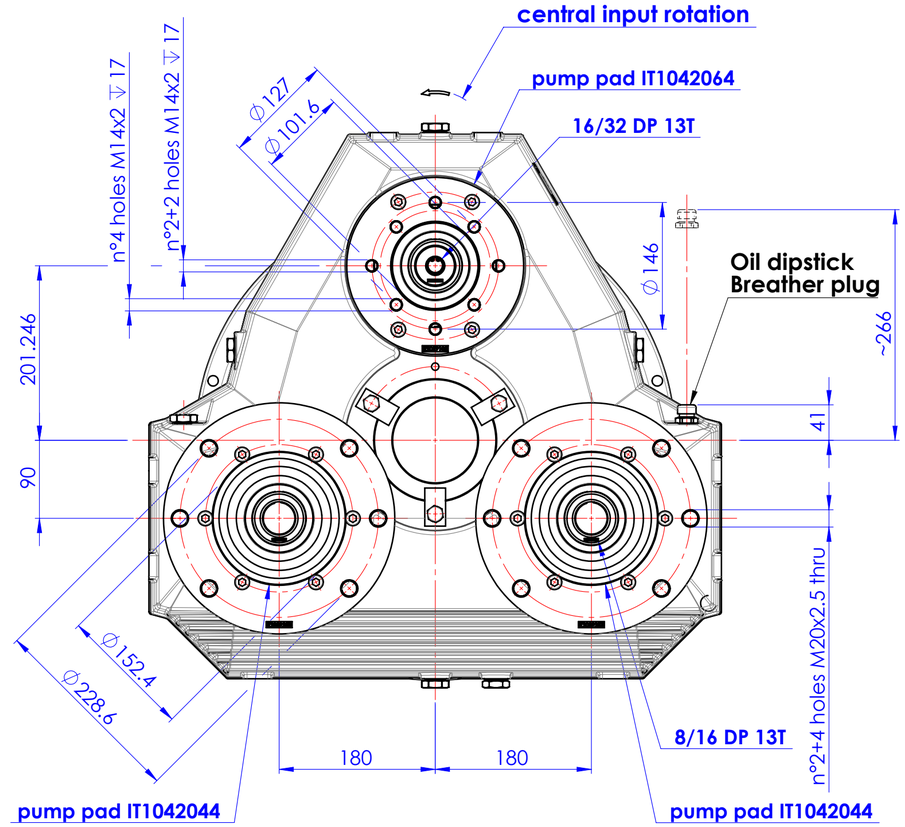

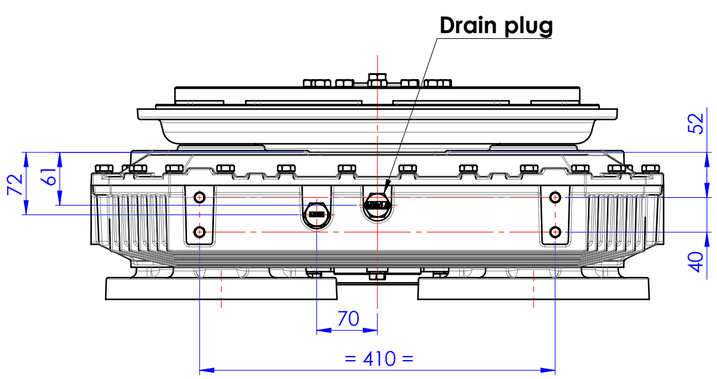

Drawing and 3D model are valid for all ratios

PRIMO UTILIZZO MONTAGGIO/FIRST USE ASSEMBLY: PRIMO IMPIEGO MODELLO/FIRST USE MODEL: SIMILE A/SIMILAR TO:	MODELLO / MADE FROM:	MATERIALE / MATERIAL:		DATA / DATE: 03/21/2018	- NDWF-4000425 03/23/2018
METRIC	PESO WEIGHT: kg WR² : kg-m²	TRATT. TERMICO / HEAT TREAT:	TRATT. SUP. / SURFACE TREATMENT:	SCALA / SCALE: 1:5	INDIC MODIF/ REV: MODIFICA / CHANGE NO. DATA / DATE
NOTICE! THIS PRINT CONTAINS PROPRIETARY INFORMATION AND IS NOT TO BE USED IN ANY MANNER DETRIMENTAL TO THE INTEREST OF TWIN DISC, INCORPORATED THIS NOTICE IS NOT INTENDED TO NULLIFY OR LIMIT RIGHTS GRANTED TO THE U.S. GOVERNMENT OR OTHERS BY CONTRACT.	THIRD ANGLE PROJECTION	TOLL. GEN. DILAVORAZIONE H13 FORO - h13 ALBERO j_s 14 DIMENSIONI LINEARI 15'fino ∅200 10'fino ∅500	DESCRIZIONE: INGOMBRO AM345 BOM 1029024W	DESCRIPTION: INSTALLATION PUMP DRIVE AM345 BOM 1029024W	DIS / DRAWN: PR VERIF. / CHECK: GG APPROVATO/APP: DAJ	TWIN DISC. DECIMA - ITALY 1029025J FORMATO / SIZE: A2 FOGLIO / SHEET: 1 OF 1 INDIC MODIF/ REV: -

D C B A

1025420W Rev. A