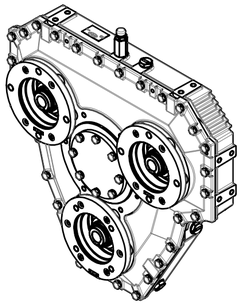

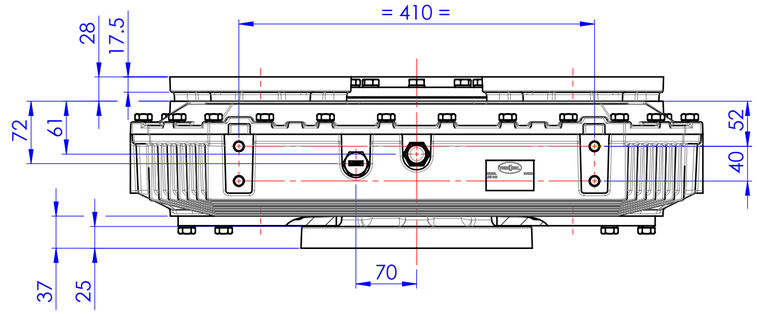

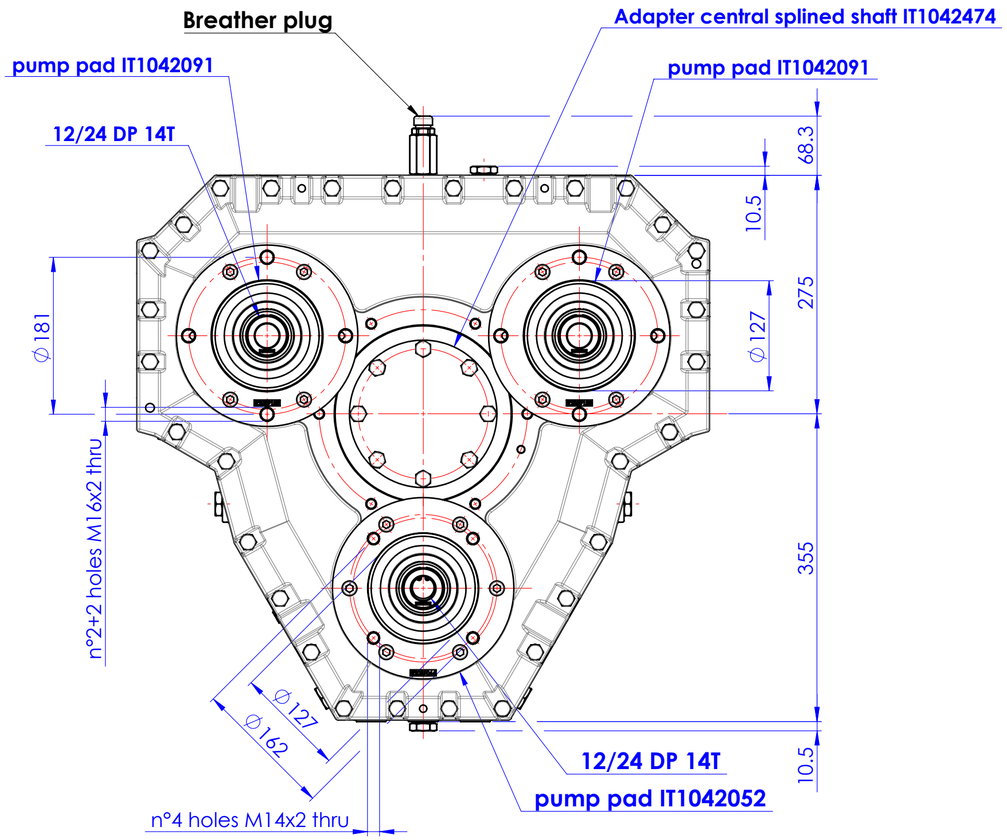

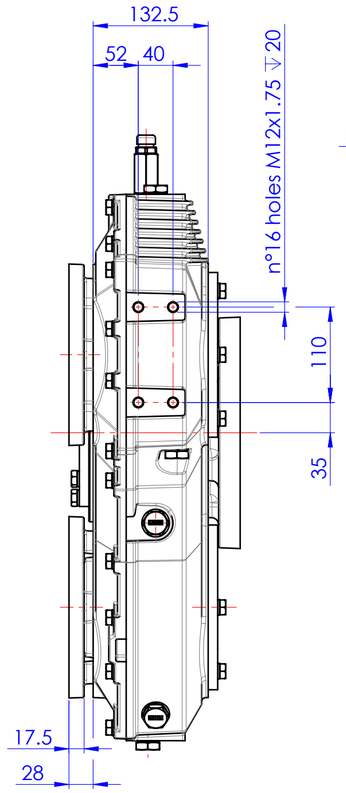

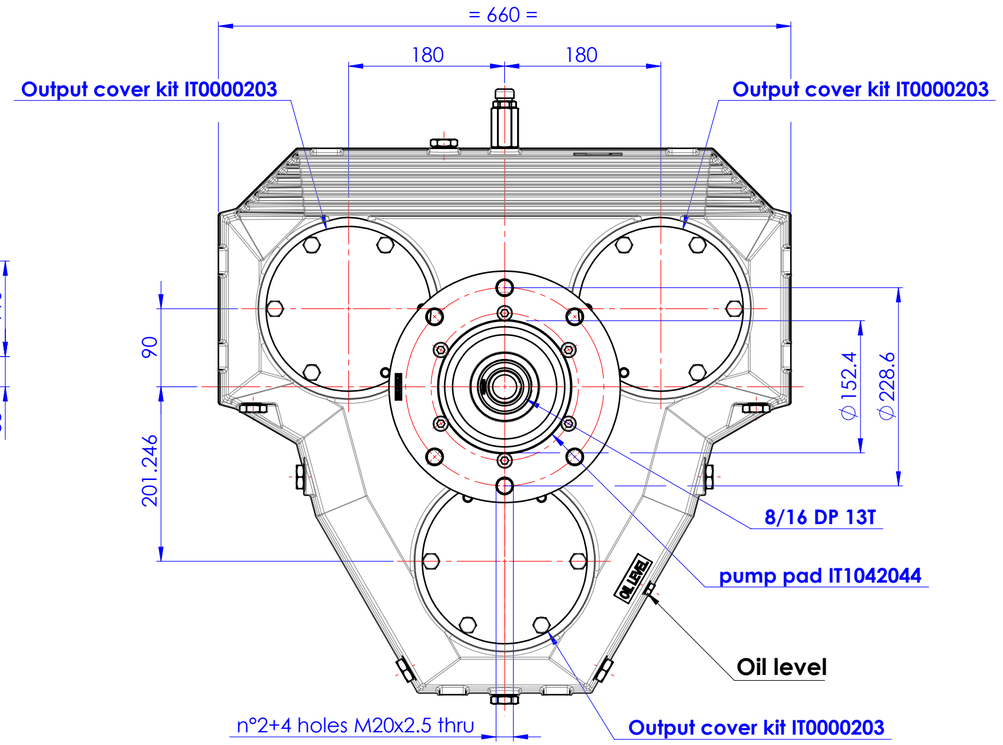

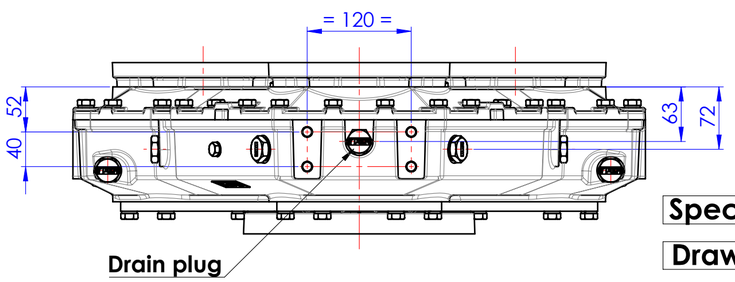

Special AM345 rotated 180°, front side pads for ratio 1.00 : ITBC0600001

Drawing and 3D model are valid for all ratios

PRIMO UTILIZZO MONTAGGIO/FIRST USE ASSEMBLY: PRIMO IMPIEGO MODELLO/FIRST USE MODEL: SIMILE A/SIMILAR TO:	MODELLO / MADE FROM:	MATERIALE / MATERIAL:		DATA / DATE: 07/19/2018	- | NDWF-4000453 | 07/31/2018
METRIC	PESO WEIGHT: kg WR^2 : $kg\text{-}m^2$	TRATT. TERMICO / HEAT TREAT:	TRATT. SUP. / SURFACE TREATMENT:	SCALA / SCALE: 1:5	INDIC MODIF/ REV: | MODIFICA / CHANGE NO. | DATA / DATE
NOTICE! THIS PRINT CONTAINS PROPRIETARY INFORMATION AND IS NOT TO BE USED IN ANY MANNER DETRIMENTAL TO THE INTEREST OF **TWIN DISC, INCORPORATED** THIS NOTICE IS NOT INTENDED TO NULLIFY OR LIMIT RIGHTS GRANTED TO THE U.S. GOVERNMENT OR OTHERS BY CONTRACT.	TOLL. GEN. DILAVORAZIONE H13 FORO - h13 ALBERO j_s 14 DIMENSIONI LINEARI 15'fino Ø200 10'fino Ø500	DESCRIZIONE: INGOMBRO AM345 BOM 1029024X	DESCRIPTION: INSTALLATION PUMP DRIVE AM345 BOM 1029024X	DIS / DRAWN: PR VERIF. / CHECK: GG APPROVATO/APP: DAJ	TWIN DISC. DECIMA - ITALY 1029025K
THIRD ANGLE PROJECTION				FORMATO / SIZE: A2	FOGLIO / SHEET: 1 OF 1 | INDIC MODIF/ REV: -

1025420W Rev. A