[1] INPUT MOUNTING FACE AND REFERENCE PLANE
[2] SUPPORT PLATE MOUNTING FACE

NOTES:
A. ALL POINTS AVAILABLE FOR TESTING ARE CODED ⬡.

B. REFER TO MANUAL FOR RECOMMENDED OIL, CHECKING, AND MAINTENANCE PROCEDURES

C. REPLACE INSTALLATION BOLTS (3) BEFORE OPERATING PTO SEE MANUAL FOR DETAILS

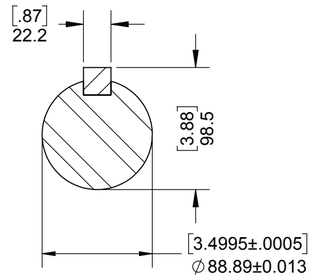

SECTION A-A

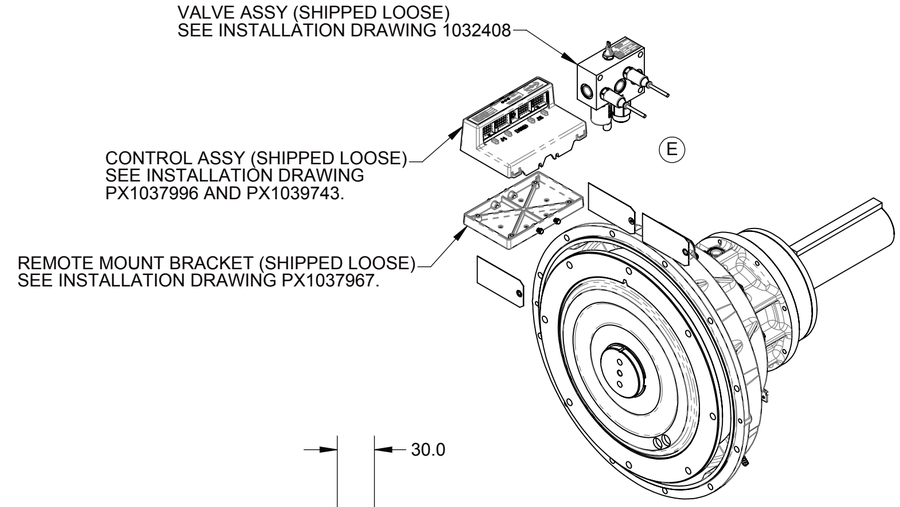

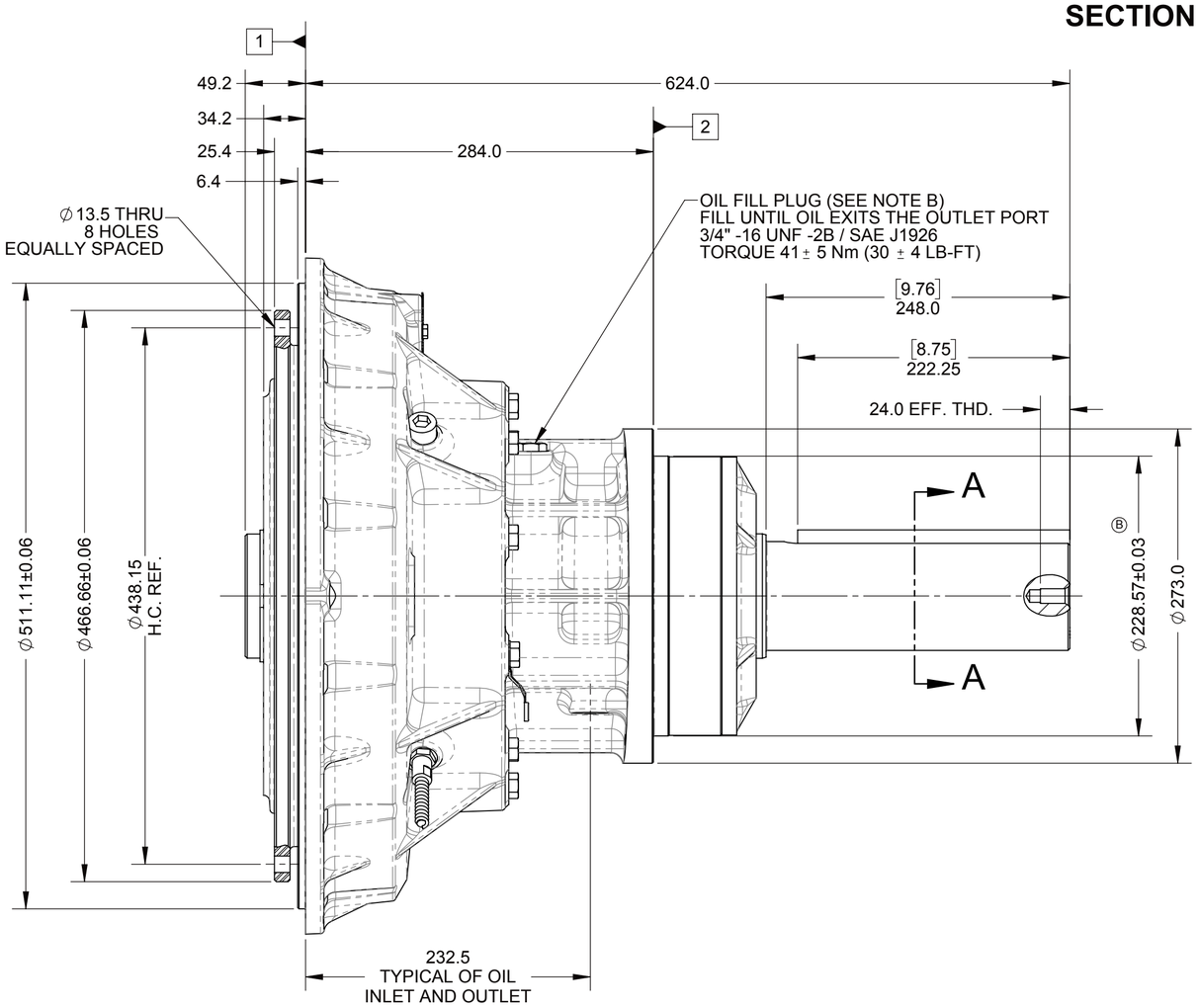

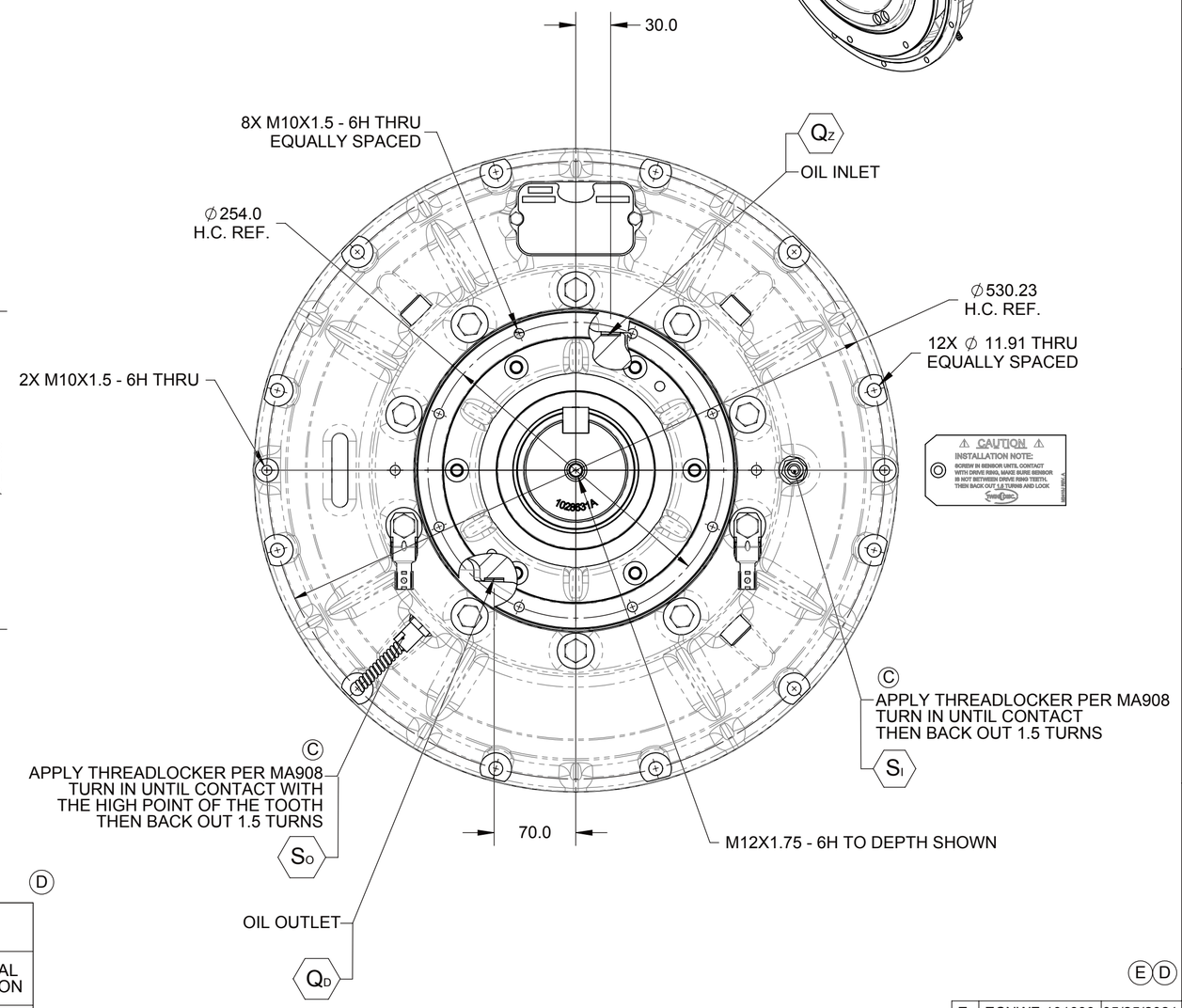

TEST PORTS						
SYMBOL	DESCRIPTION	PORT / STANDARD	DESCRIPTION	TORQUE	CLEARANCE FOR REMOVAL (mm)	ELECTRICAL CONNECTION
Q_D	FLOW TO SUMP	3/4" -16 UNF-2B / SAE J1926	O-RING PORT	41 ± 5 Nm (30 ± 4 LB-FT)	15	-
Q_Z	FLOW TO CLUTCH	3/4" -16 UNF-2B / SAE J1926	O-RING PORT	41 ± 5 Nm (30 ± 4 LB-FT)	15	-
S_I	INPUT SPEED SENSOR (59 PULSES PER REV.)	5/8" -18 UNF- 2A	-	24.4 ± 2.7 Nm (18 ± 2 LB-FT)	-	DEUTSCH DT04-3P
S_O	OUTPUT SPEED SENSOR (30 PULSES PER REV.)	5/8" -18 UNF- 2A	-	24.4 ± 2.7 Nm (18 ± 2 LB-FT)	-	DEUTSCH DT04-3P

REV	CHANGE NO.	DATE
E	ECNWF-101839	05/25/2021

FIRST USE ASSEMBLY: S1040583
FIRST USE MODEL: RC314P1
SIMILAR TO:
WEIGHT: 205.6 kg
WR²: kg-m²

THIRD ANGLE PROJECTION

METRIC

NOTICE! THIS PRINT CONTAINS PROPRIETARY INFORMATION AND IS NOT TO BE USED IN ANY MANNER DETRIMENTAL TO THE INTEREST OF **TWIN DISC, INCORPORATED**
THIS NOTICE IS NOT INTENDED TO NULLIFY OR LIMIT RIGHTS GRANTED TO THE U.S. GOVERNMENT OR OTHERS BY CONTRACT.

UNLESS OTHERWISE SPECIFIED
MACHINED DIMENSIONS
X ±0.75
X.X ±0.25
X.XX ±0.13
ALL ANGULAR TOLERANCES ±1°
GEOMETRIC TOLERANCING
PER ASME Y14.5M 1994

MATERIAL:
HEAT TREAT:
DESCRIPTION: INSTALLATION PTO, RC314P1

DATE: 6/21/2016
SCALE: 1:3.5
DRAWN BY: DAJ
CHECKED BY: JEL
APPROVED BY: DAJ

TWIN DISC
RACINE, WI 53403 - USA

1029135D

DWG SIZE: A2 | SHEET: 1 OF 1 | REV: E

1025420W Rev.A

D C B A