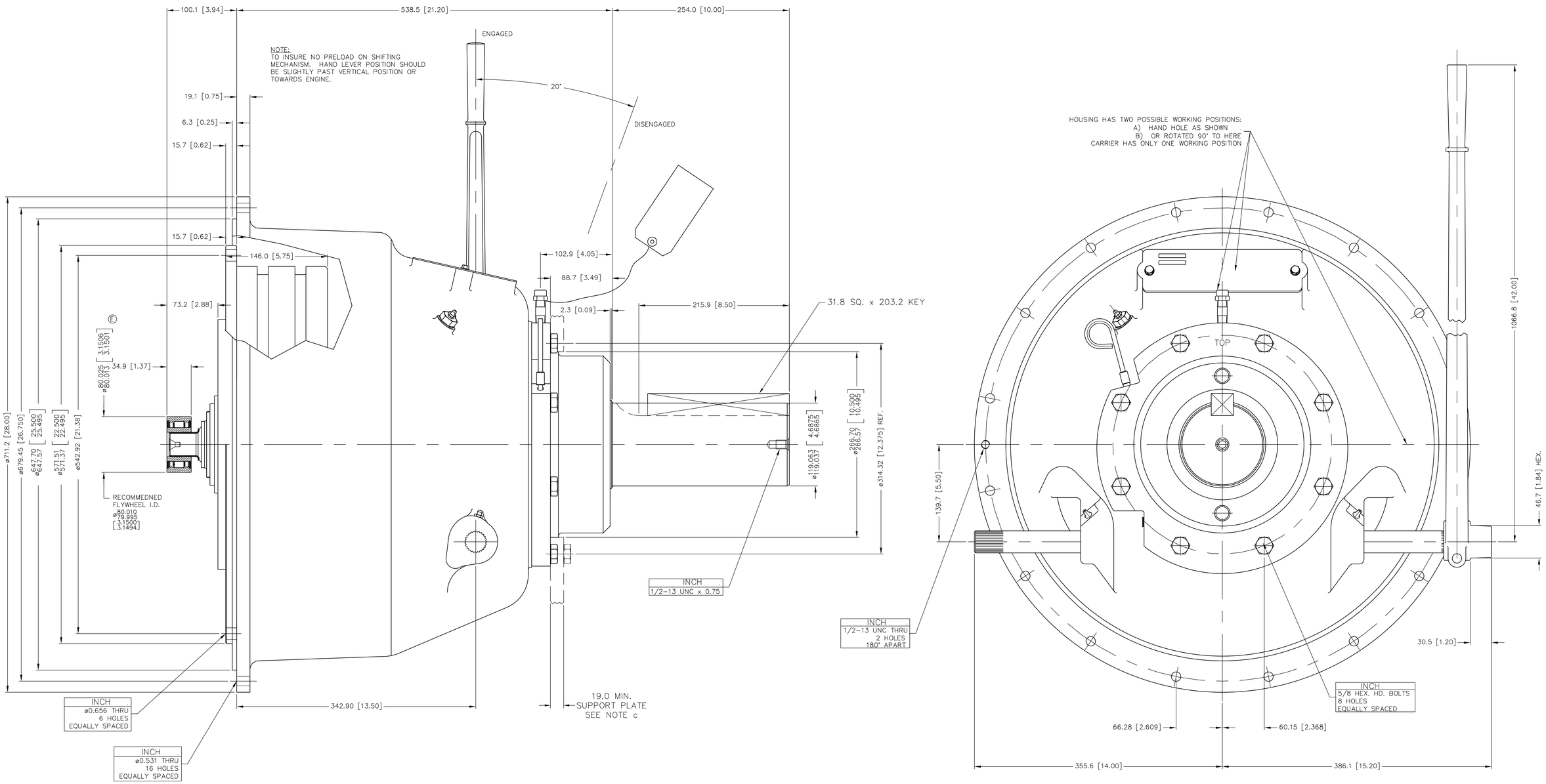

GENERAL NOTES:

a.) REFER TO BOM LIST WHEN ORDERING PARTS.

b.) REFER TO CARE & OPERATION MANUAL FOR ADDITIONAL INFO.

c.) A SUPPORT PLATE MUST BE USED.

UNLESS OTHERWISE SPECIFIED DIMENSIONS ARE mm
MACHINED DIMENSIONS
X. ±0.75
X.X ±0.25
X.XX ±0.13
ALL ANGULAR TOLERANCES ±1°
GEOMETRIC TOLERANCING PER ASME Y14.5M 1994

WEIGHT kg | WET N.m | FIRST USE ASSY. IBF318P011 MODEL IBF318OP0

NOTICE! THIS PRINT CONTAINS PROPRIETARY INFORMATION AND IS NOT TO BE USED IN ANY MANNER DETRIMENTAL TO THE INTEREST OF TWIN DISC, INCORPORATED.
THIS NOTICE IS NOT INTENDED TO NULLIFY OR LIMIT RIGHTS GRANTED TO THE U.S. GOVERNMENT OR OTHERS BY CONTRACT.

METRIC

THIRD ANGLE PROJECTION

MATERIAL

HEAT TREAT

SIMILAR TO IB318P001

NAME IBF318OP0 POWER TAKE OFF

DATE 10/21/96
SCALE .50 = 1
DRN. RDW
CHK. TRL
APPD. T. KLAVES

TWIN DISC INCORPORATED
RACINE, WI 53403 - USA

IB318P011

DWG SIZE A0 SHT. 2 OF 2 REV E