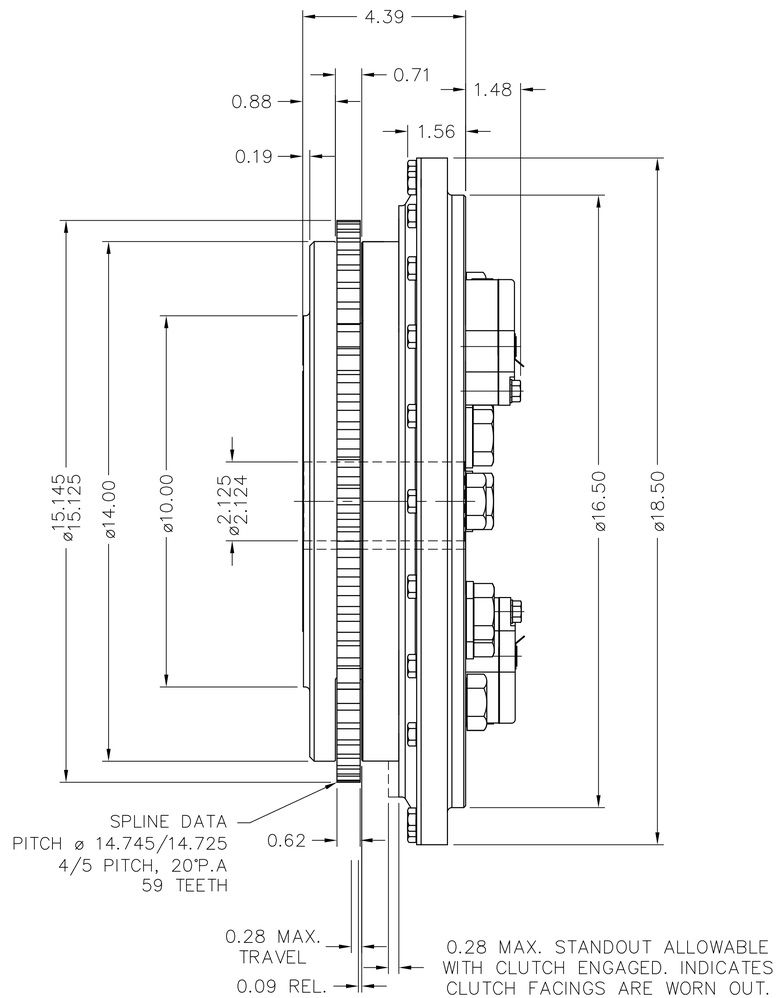

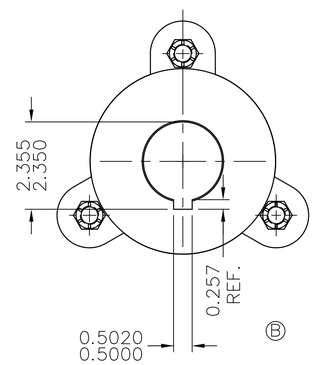

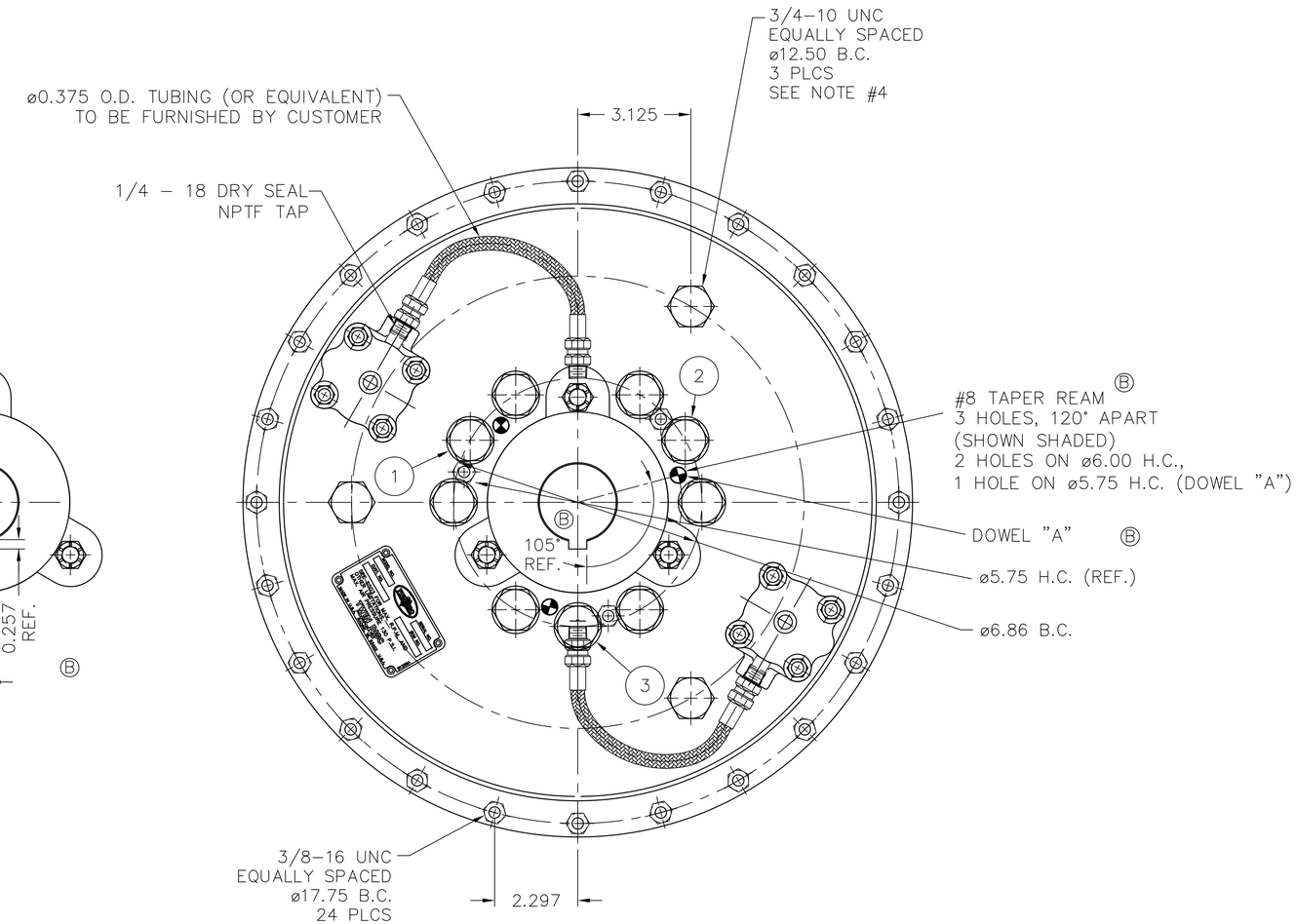

NOTES:

1.) REFER TO BILL OF MATERIAL LIST WHEN ORDERING PARTS.
2.) REFER TO CARE & OPERATION MANUAL FOR ADDITIONAL INFO.
3.) REFER TO TWIN DISC STANDARD S503 FOR LIMITING CONDITIONS AND MAX. SPEEDS.
4.) FOR EMERGENCY MECHANICAL CLUTCH LOCK–UP,
REMOVE THESE THREE SCREWS AND INSERT THREE SCREWS MARKED
(1) (2) (3)

UNLESS OTHERWISE SPECIFIED MACHINED DIMENSIONS X.X ±0.030 X.XX ±0.010 X.XXX ±0.005 ALL ANGULAR TOLERANCES ±1° GEOMETRIC TOLERANCING PER ASME Y14.5M 1994	WEIGHT 144 lbs. / WR² lbs./ft²	FIRST USE ASSY. : P0114C011 MODEL : P0114	INCH	MATERIAL	HEAT TREAT
	NOTICE! THIS PRINT CONTAINS PROPIETARY INFORMATION AND IS NOT TO BE USED IN ANY MANNER DETRIMENTAL TO THE INTEREST OF TWIN DISC, INCORPORATED THIS NOTICE IS NOT INTENDED TO NULLIFY OR LIMIT RIGHTS GRANTED TO THE U.S. GOVERNMENT OR OTHERS BY CONTRACT.		THIRD ANGLE PROJECTION	SIMILAR TO X9656	NAME P0114 AIR CLUTCH

DATE 01–07–03
SCALE .50:1
DRN. DJH
CHK. JTS
APPD. JTS

TWIN DISC INCORPORATED
RACINE, WI 53403 – USA

P0114C011

DWG SIZE D SHT. 2 OF 2 REV B

Form 1025420W Rev. A