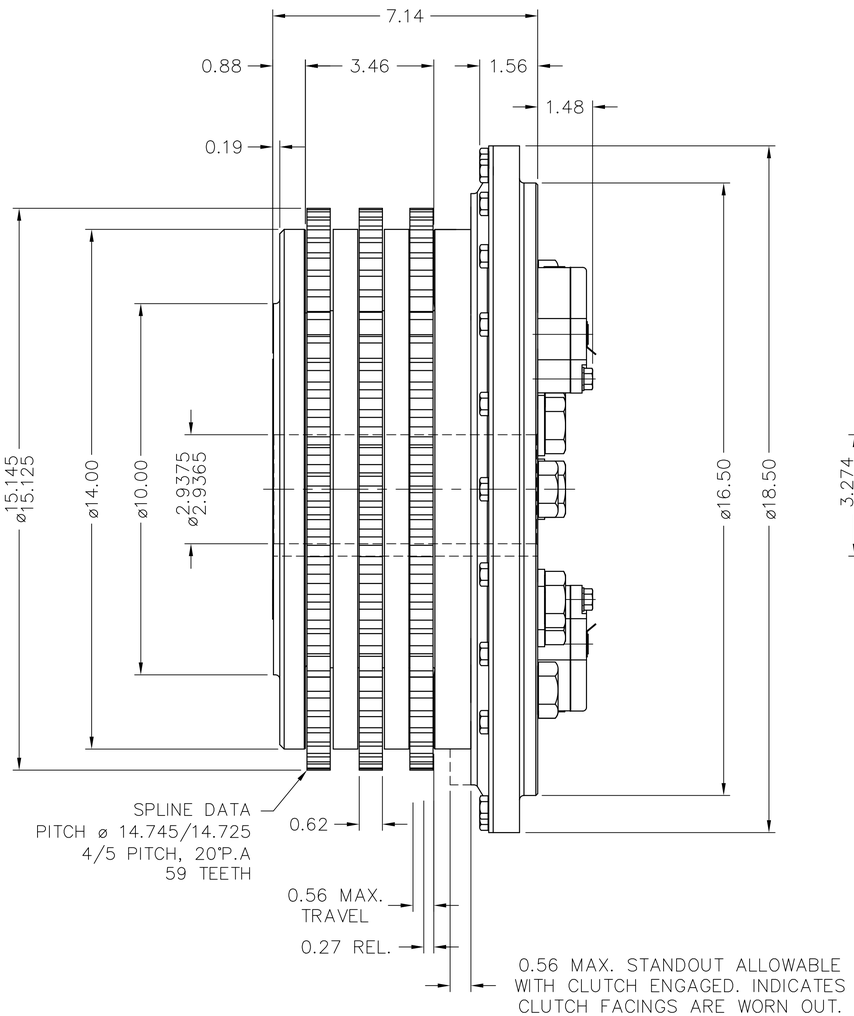

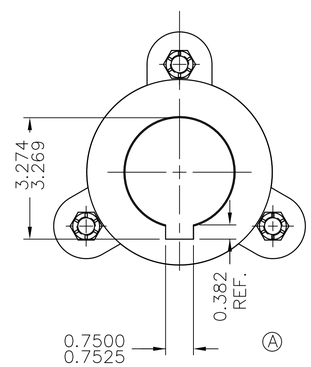

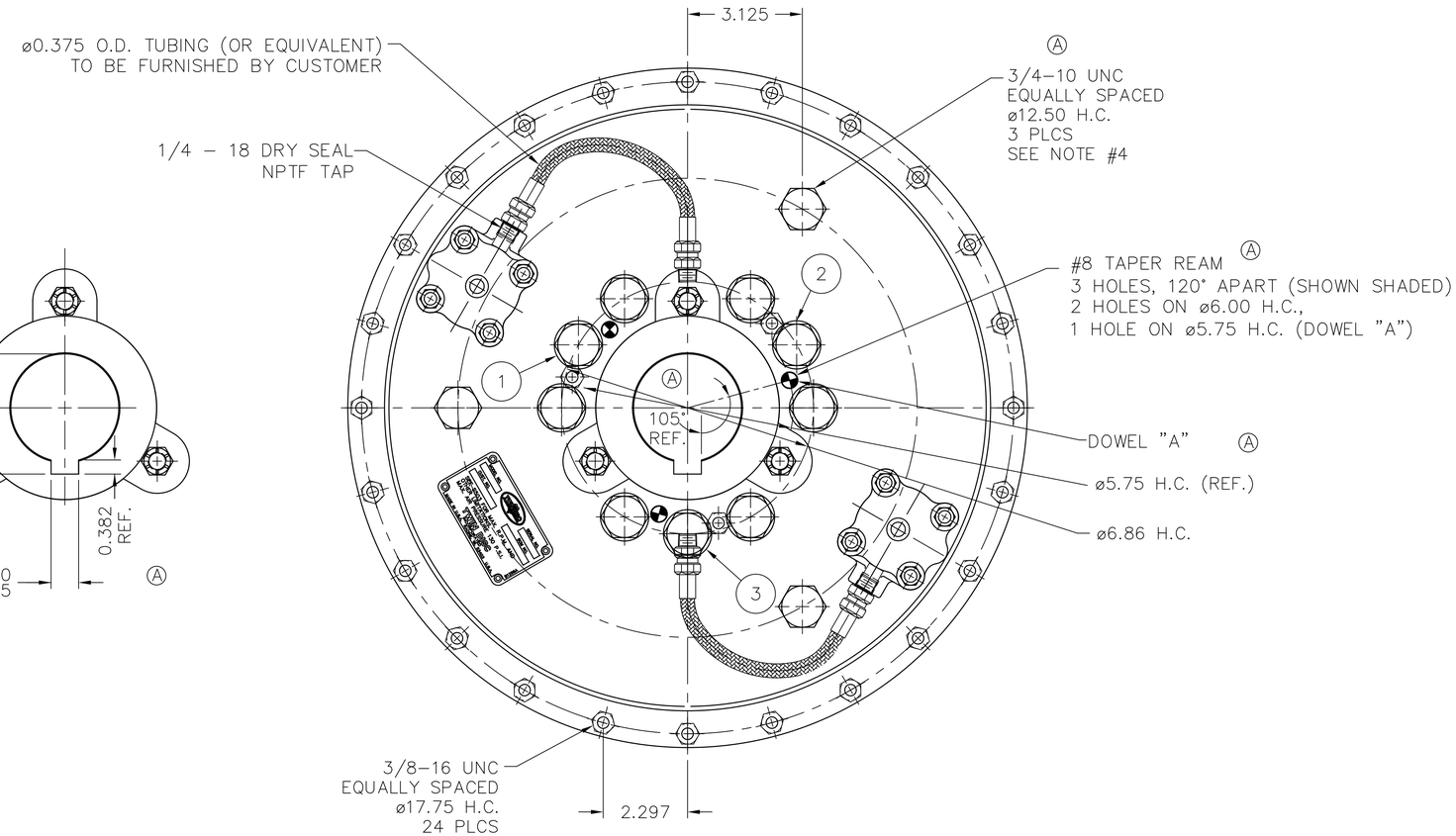

NOTES:

1.) REFER TO BILL OF MATERIAL LIST WHEN ORDERING PARTS.
2.) REFER TO CARE & OPERATION MANUAL FOR ADDITIONAL INFO.
3.) REFER TO TWIN DISC STANDARD S503 FOR LIMITING CONDITIONS AND MAX. SPEEDS.
4.) FOR EMERGENCY MECHANICAL CLUTCH LOCK–UP,
REMOVE THESE THREE SCREWS AND INSERT THREE SCREWS MARKED
(1) (2) (3)

UNLESS OTHERWISE SPECIFIED MACHINED DIMENSIONS X.X ±0.030 X.XX ±0.010 X.XXX ±0.005 ALL ANGULAR TOLERANCES ±1° GEOMETRIC TOLERANCING PER ASME Y14.5M 1994	WEIGHT 184 lbs.	WR² lbs./in²	FIRST USE ASSY. : P0314C014 MODEL : P0314	INCH	MATERIAL
	NOTICE! THIS PRINT CONTAINS PROPRIETARY INFORMATION AND IS NOT TO BE USED IN ANY MANNER DETRIMENTAL TO THE INTEREST OF TWIN DISC, INCORPORATED. THIS NOTICE IS NOT INTENDED TO NULLIFY OR LIMIT RIGHTS GRANTED TO THE U.S. GOVERNMENT OR OTHERS BY CONTRACT.			THIRD ANGLE PROJECTION	SIMILAR TO X9685

HEAT TREAT	
NAME	P0314 AIR CLUTCH
DATE	01–07–03
SCALE	.50:1
DRN.	DJH
CHK.	JTS
APPD.	JTS
TWIN DISC INCORPORATED RACINE, WI 53403 – USA	
	P0314C014
DWG SIZE	D
SHT.	2 OF 2
REV	A

Form 1025420W Rev. A