1 INPUT GROUP MOUNTING FACE
2 PTO GROUP MOUNTING FACE
3 LEFT BRACKET MOUNTING FACE
4 RIGHT BRACKET MOUNTING FACE

NOTES :

A. PROPORTIONAL CONTROL VALVE OPERATION
1. WARNING DO NOT CONNECT VALVE COIL DIRECTLY TO BATTTERY / POWER SUPPLY VOLATAGE.
2. OPERATION TO BE PERFORMED WITH ONLY TWIN DISC CONTROL SYSTEMS OR MODULES.

B. MANUAL OVERRIDE VALVE OPERATION
1. THE MANUAL OVERRIDE FEATURE FOR THE PRIMARY AND SECONDARY SOLENOIDS MUST NEVER BE ENGAGED SIMULTANEOUSLY.
2. ROTATE THE MANUAL OVERRIDE SCREW COUNTER-CLOCKWISE UNTIL THE SCREWS STOPS FOR THE NEUTRAL POSITION
3. THE MANUAL OVERRIDE SCREWS FOR BOTH THE PRIMARY AND SECONDARY SOLENOID MUST BE IN THE NEUTRAL POSITION TO OPERATE THE VALVE UTILIZING THE TWIN DISC CONTROL SYSTEM.
4. TO ENGAGE PRIMARY CLUTCH TURN THE PRIMARY OVERRIDE SCREW IN A CLOCKWISE DIRECTION UNTIL THE SCREW STOPS TURNING.
5. TO ENGAGE SECONDARY CLUTCH TURN THE SECONDARY OVERRIDE SCREW IN A CLOCKWISE DIRECTION UNTIL THE SCREW STOPS TURNING.

C. REFERENCE S930 FOR TWIN DISC REQUIREMENTS FOR PRESSURE AND ALARM LEVELS.

D. UNLESS OTHERWISE SPECIFIED, FASTENER TORQUE VALUES PER S574 STANDARD.

E. ALL POINTS AVAILABLE FOR TESTING ARE CODED

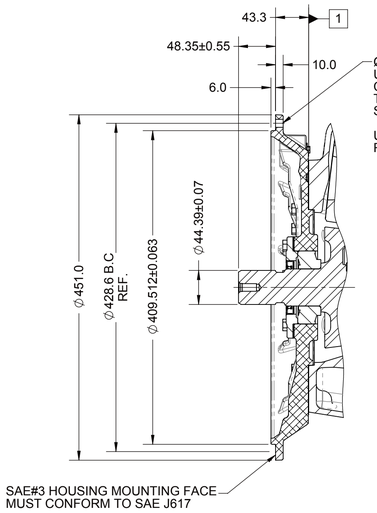

SECTION A-A

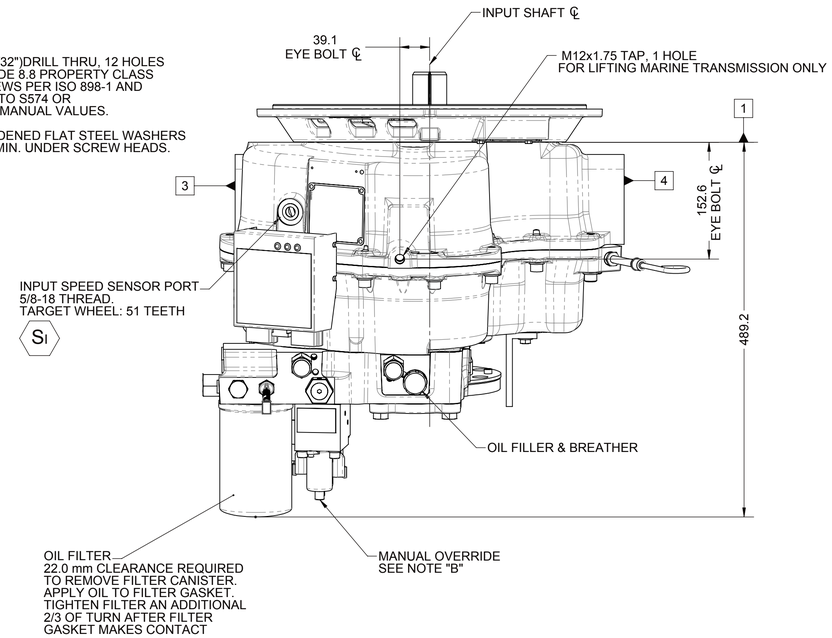

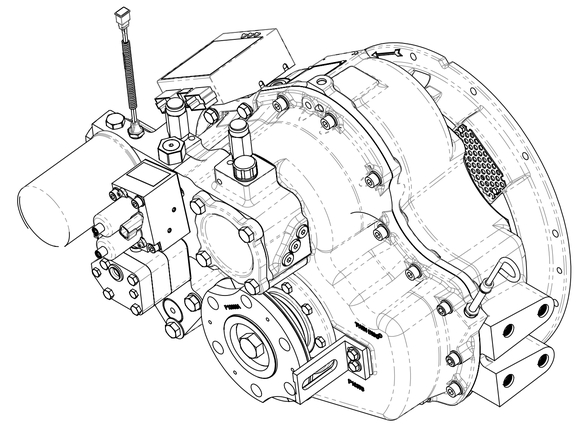

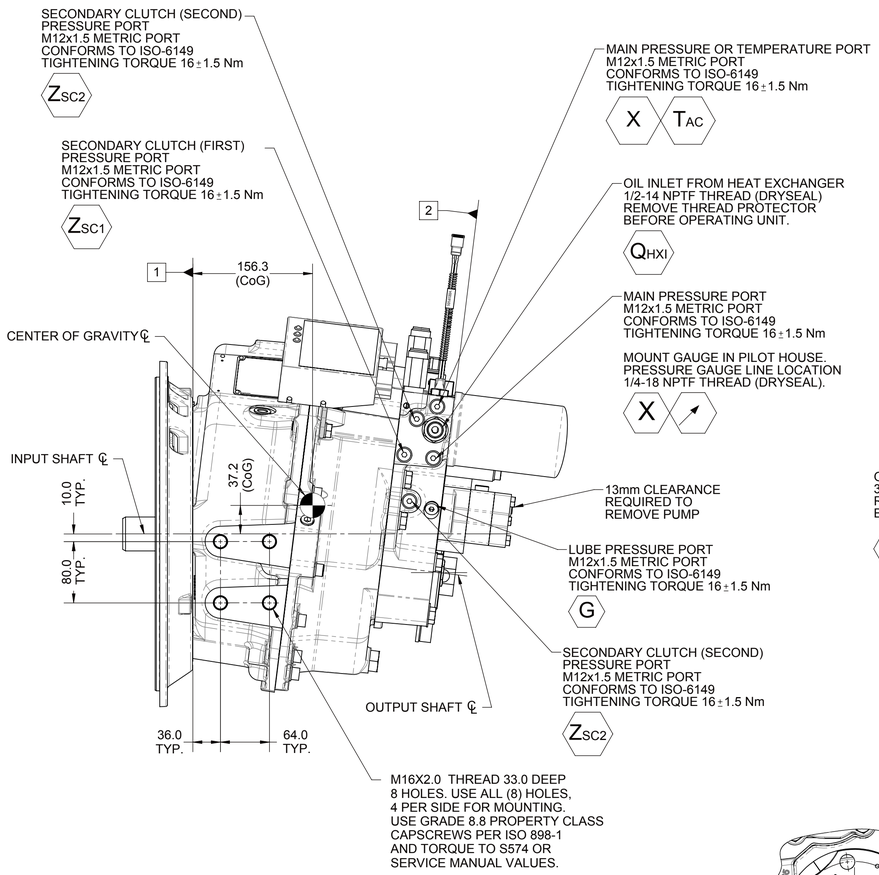

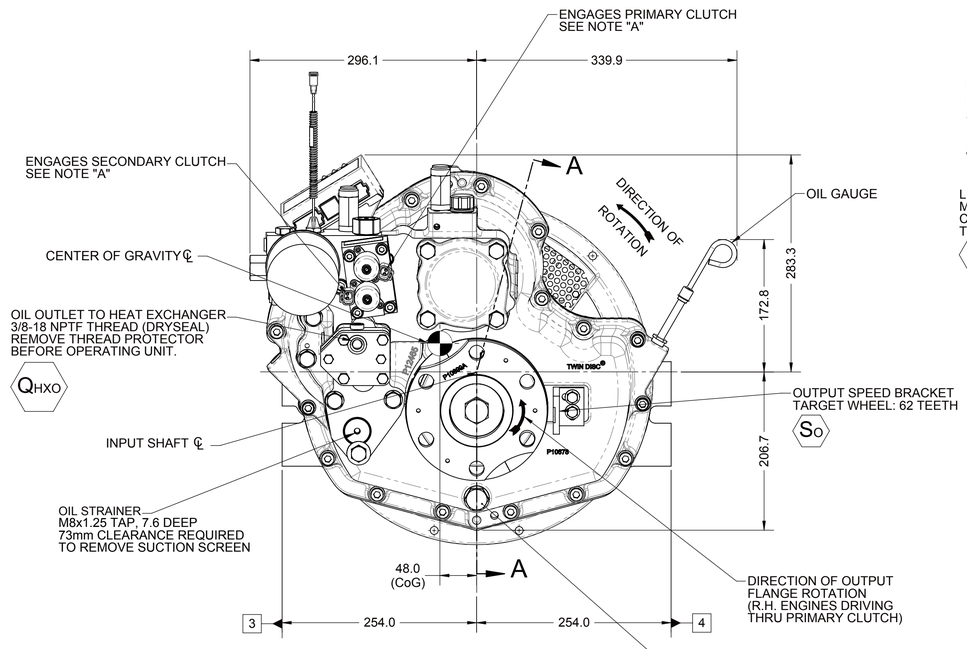

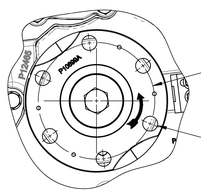

∅152.4 B.C. REF.

∅ 19.5 ±0.1 DRILL THRU 6 HOLES EQUALLY SPACED USE 12.9 PROPERTY CLASS QUALITY CAPSCREWS PER ISO 898-1 AND TORQUE TO S574 OR SERVICE MANUAL VALUES.

VIEW B-B

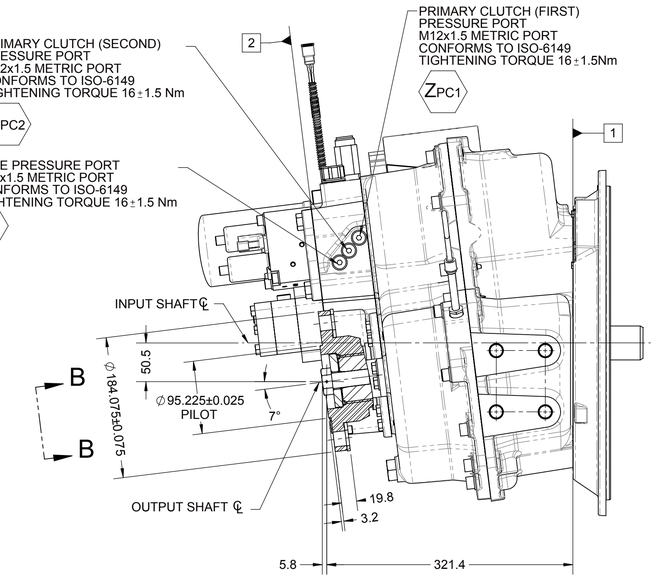

EQUIPMENT SHOWN:

- MGX-5075A PER PX12610 ASSEMBLY
- SAE #3 HOUSING
- GP VALVE WITH EC050 CONTROL MODULE
- SAE #4 OUTPUT FLANGE

REV	CHANGE NO.	DATE
-	NDWF-010511	06/20/2019

FIRST USE ASSEMBLY:
FIRST USE MODEL:
SIMILAR TO:
WEIGHT: 130kg
WR²: kg-m²
THIRD ANGLE PROJECTION
METRIC
UNLESS OTHERWISE SPECIFIED MACHINED DIMENSIONS X.X ±0.25 X.XX ±0.13 X.XXX ±0.13 ALL ANGULAR TOLERANCES ±1° GEOMETRIC TOLERANCING PER ASME Y14.5M 1994
MATERIAL:
HEAT TREAT:
DESCRIPTION: INSTALLATION MGX-5075A
DATE: 04/04/2019
SCALE: 1:4
DRAWN BY: LT
CHECKED BY: DV
APPROVED BY: DV
TWIN DISC
RACINE, WI 53403 - USA
PX1031577C
DWG SIZE: A1
SHEET: 1 OF 1
REV: -

NOTICE! THIS PRINT CONTAINS PROPRIETARY INFORMATION AND IS NOT TO BE USED IN ANY MANNER DETRIMENTAL TO THE INTEREST OF TWIN DISC, INCORPORATED. THIS NOTICE IS NOT INTENDED TO NULLIFY OR LIMIT RIGHTS GRANTED TO THE U.S. GOVERNMENT OR OTHERS BY CONTRACT.

1025420W Rev. B