1 INPUT GROUP REFERENCE PLANE

2 PTO ADAPTER MOUNTING FACE

3 LEFT MOUNTING BRACKET FACE

4 RIGHT MOUNTING BRACKET FACE

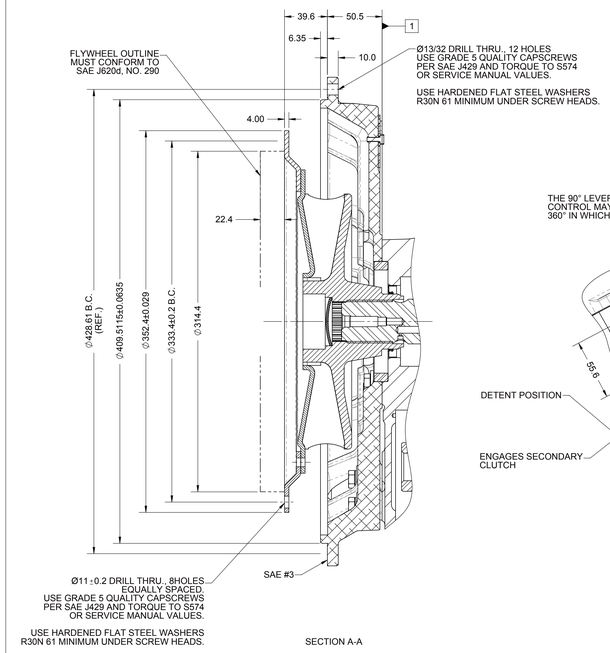

SECTION A-A

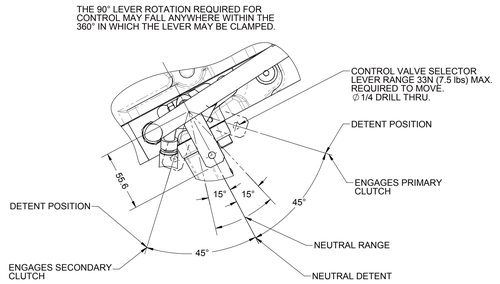

VIEW B-B

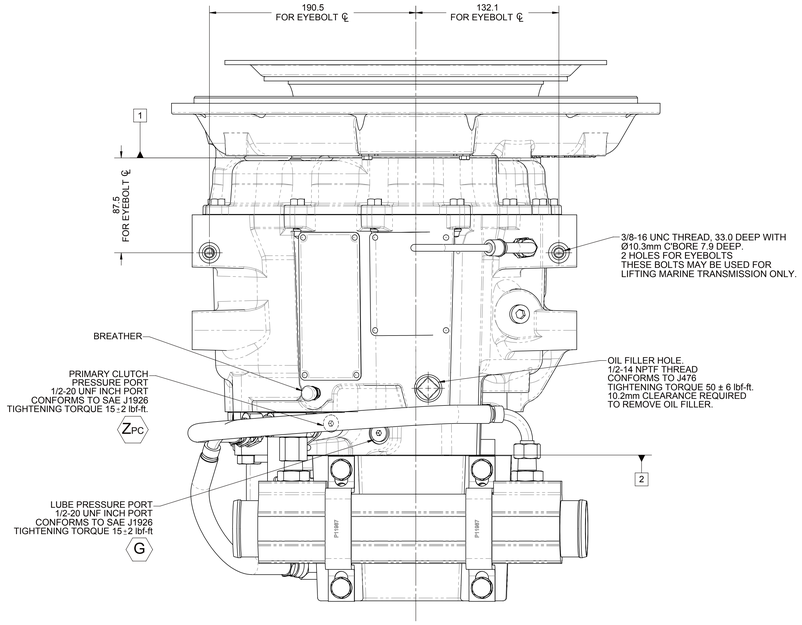

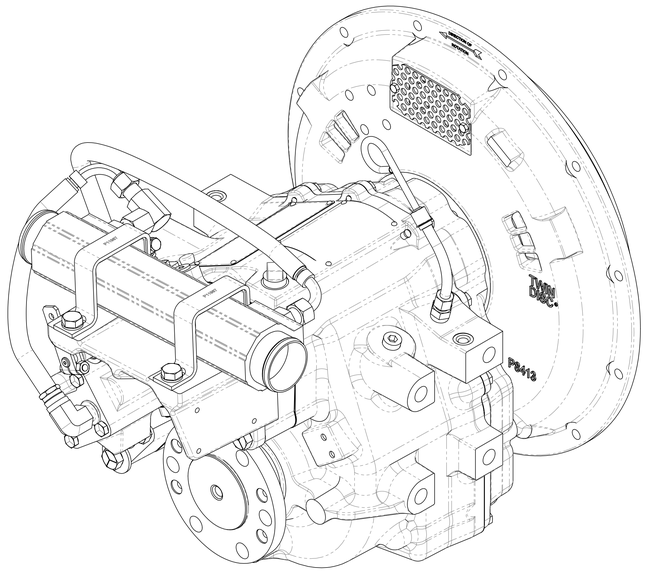

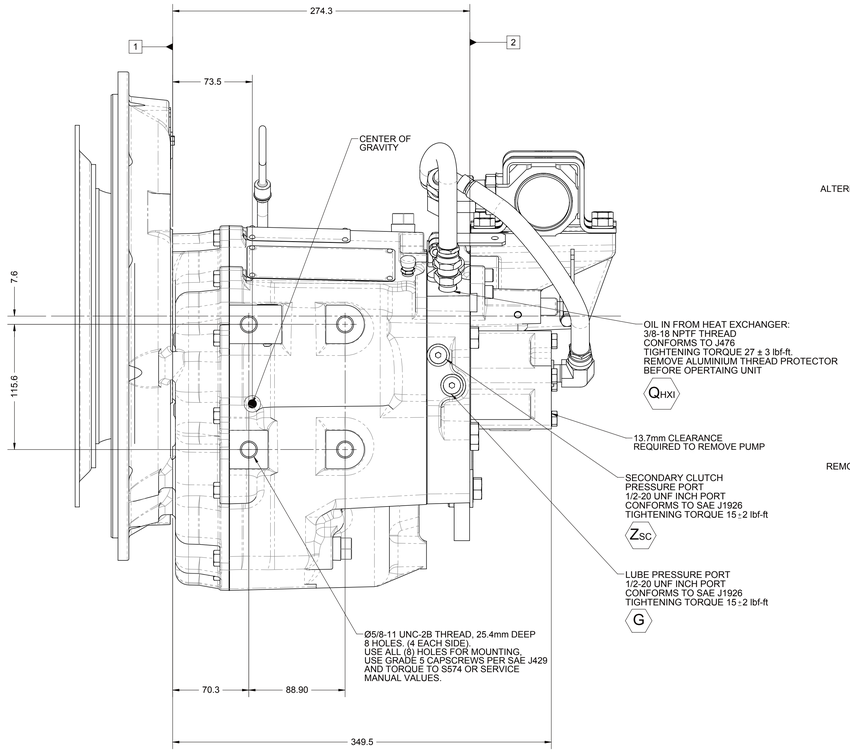

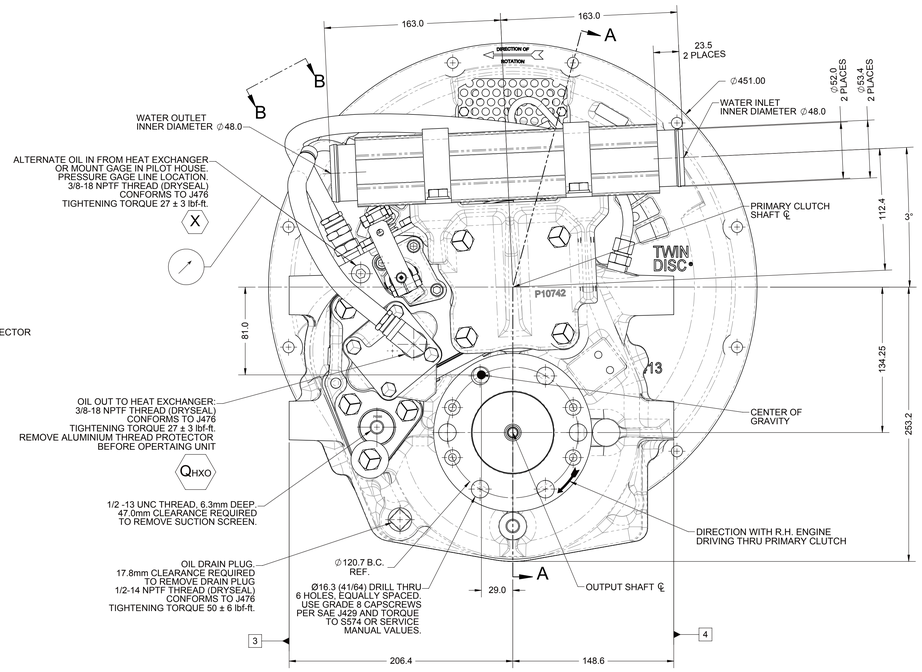

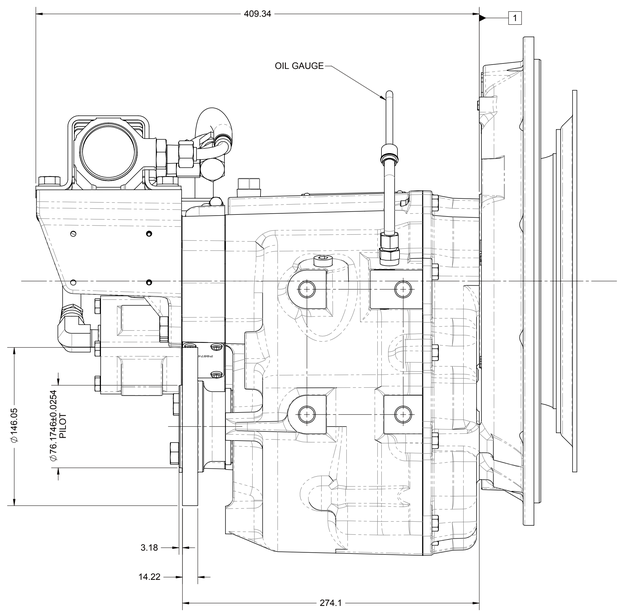

EQUIPMENT SHOWN:

- MG-5050SC PER PX12700 ASSEMBLY
- SAE #3/SAE 290 VULKAN VKE-3200 SERIES
- MECHANICAL CONTROL VALVE WITH MECHANICAL TROLLING VALVE
- MOUNTED PM11990 HEAT EXCHANGER

NOTE:

- ALL POINTS AVAILABLE FOR TESTING ARE CODED
- ALL BOLTS AND FITTINGS TIGHTENED PER S574 OR SERVICE MANUAL VALUES UNLESS OTHERWISE SPECIFIED.

REV	CHANGE NO.	DATE
-	NDWF-50065	01/11/2013

FIRST USE ASSEMBLY:
FIRST USE MODEL:
SIMILAR TO:
WEIGHT: 91.0 kg
WR² kg-m²
THIRD ANGLE PROJECTION
MATERIAL:
HEAT TREAT:
DATE: 02/07/2012
SCALE: 1:2
DRAWN BY: NK
CHECKED BY: DV
APPROVED BY: ALC

METRIC

UNLESS OTHERWISE SPECIFIED MACHINED DIMENSIONS
X.X ±0.25
X.XX ±0.13
X.XXX ±0.10
ALL ANGULAR TOLERANCES ±1°
FINISH: 125 RMS MAXIMUM PER ASME Y14.5M 1994

DESCRIPTION: INSTALLATION MG-5050SC

NOTICE: THIS PRINT CONTAINS PROPRIETARY INFORMATION AND IS NOT TO BE USED FOR ANY PURPOSE OTHER THAN THE INTEREST OF TWIN DISC, INCORPORATED
THIS NOTICE IS NOT INTENDED TO HALT ANY RIGHTS GRANTED TO THE U.S. GOVERNMENT OR OTHERS BY CONTRACT.

TWIN DISC
RACINE, WI 53403 - USA

PX13021

DWG SIZE: A0 SHEET: 1 OF 1 REV: -