1 INPUT GROUP REFERENCE PLANE
2 PTO GROUP REFERENCE PLANE
3 LEFT BRACKET MOUNTING FACE
4 RIGHT BRACKET MOUNTING FACE
5 PTO PUMP MOUNTING FACE

NOTE :

ALL POINTS AVAILABLE FOR TESTING ARE CODED ⬡

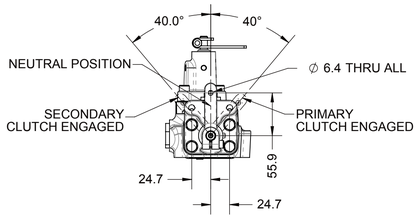

VIEW B-B

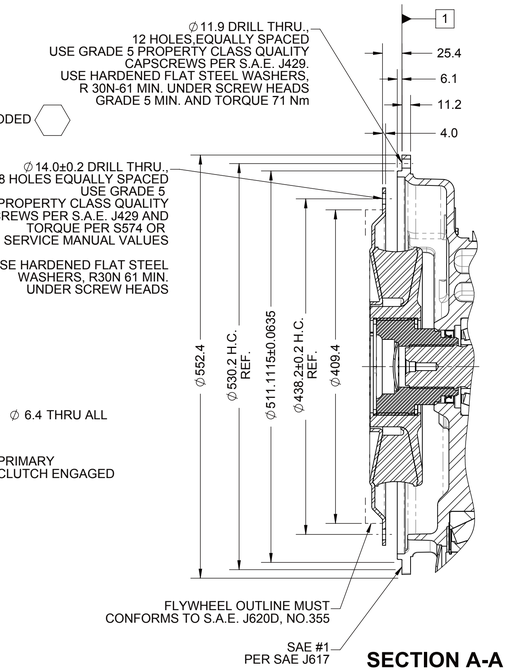

SECTION A-A

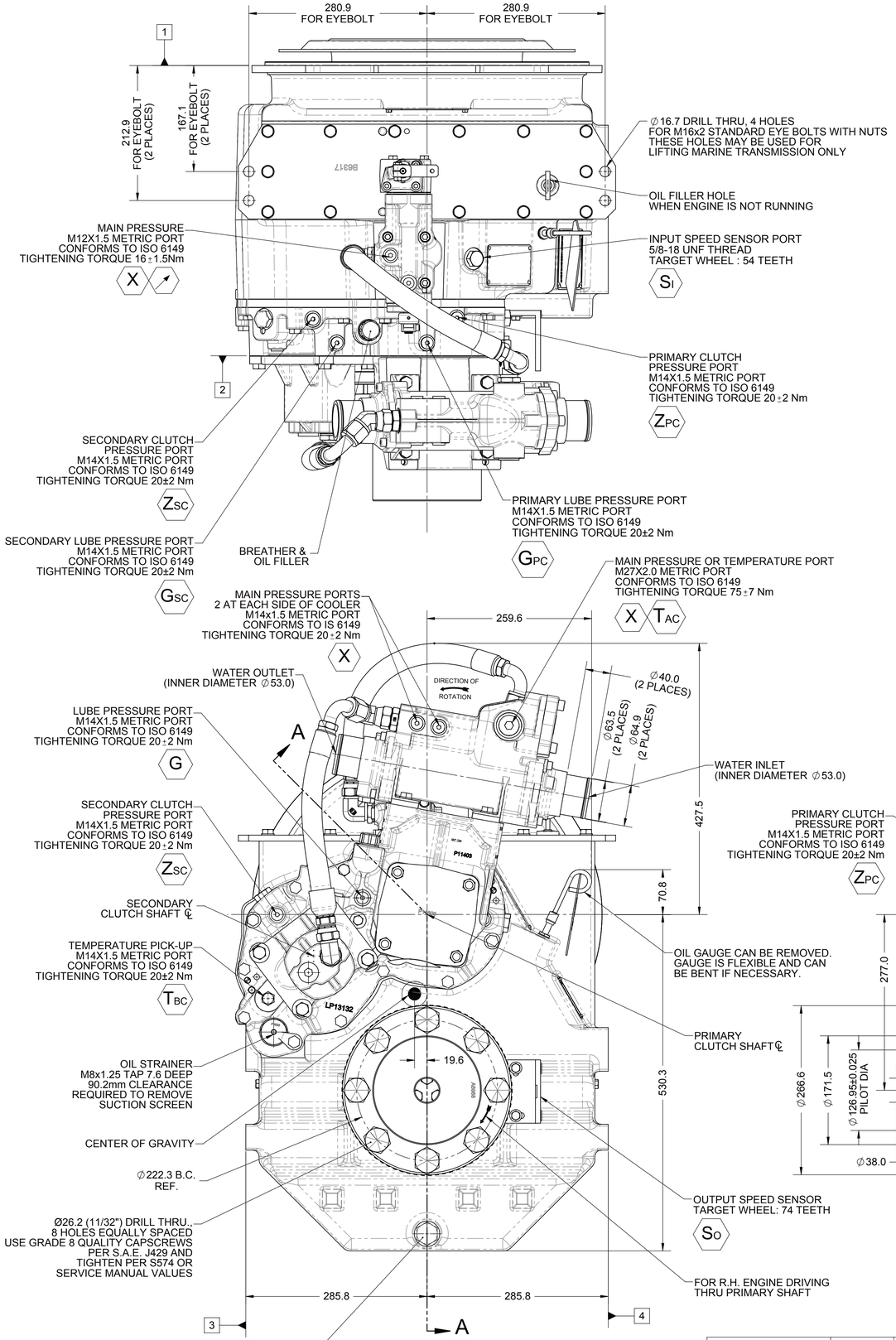

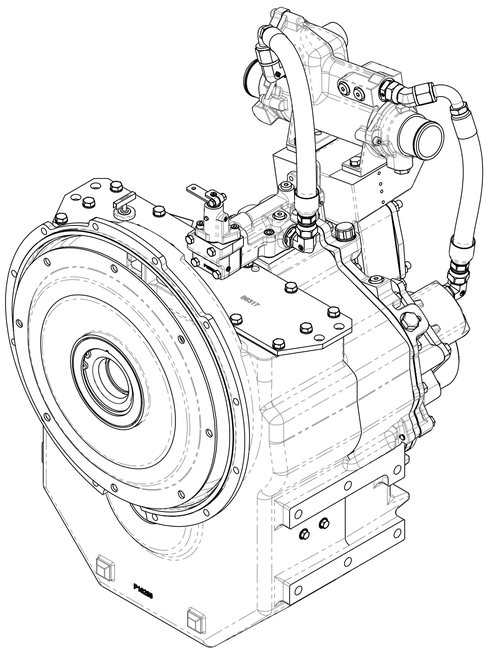

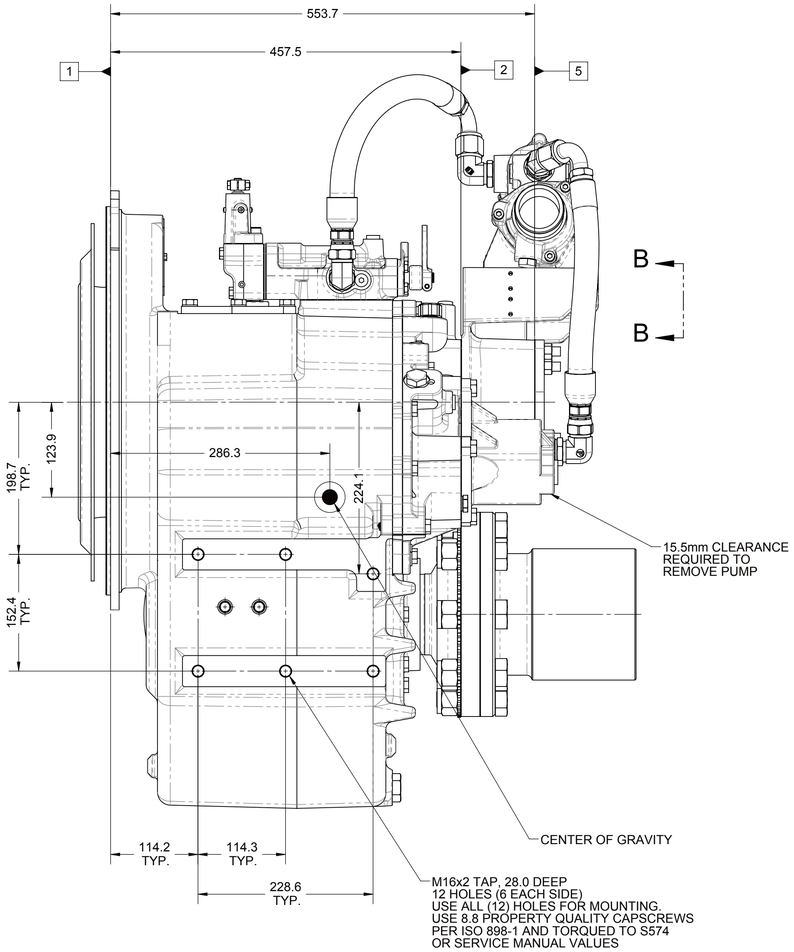

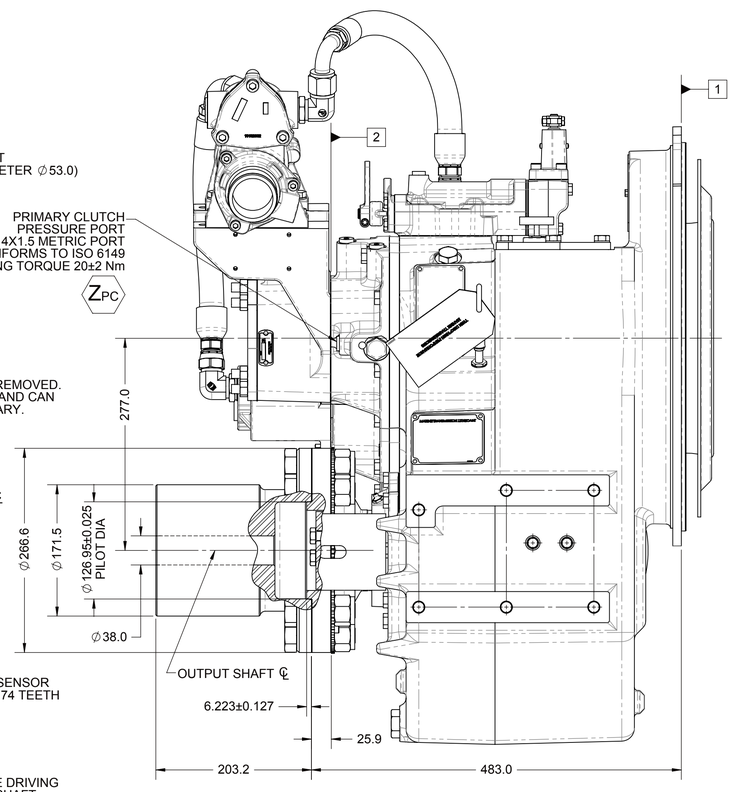

EQUIPMENT SHOWN:
- MG-5114DC PER PX13180
- SAE #1/SAE 355 VULKAN VKE-4010 SERIES
- MECHANICAL CONTROL VALVE WITH TROLLING
- SAE 127-4 PTO ADAPTER W/ HEAT EXCHANGER BRACKET
- PM13008 MOUNTED HEAT EXCHANGER
- XA6988B COMPANION FLANGE

REV	CHANGE NO.	DATE
-	NDWF-50273	10/02/2014

FIRST USE ASSEMBLY:
FIRST USE MODEL:
SIMILAR TO:
WEIGHT: 458.74 kg
WR²: kg-m²

THIRD ANGLE PROJECTION

METRIC

NOTICE: THIS PRINT CONTAINS PROPRIETARY INFORMATION AND IS NOT TO BE USED IN ANY MANNER DETRIMENTAL TO THE INTEREST OF TWIN DISC, INCORPORATED.
THIS NOTICE IS NOT INTENDED TO NULLIFY OR LIMIT RIGHTS GRANTED TO THE U.S. GOVERNMENT OR OTHERS BY CONTRACT.

UNLESS OTHERWISE SPECIFIED
MACHINED DIMENSIONS
X. ±0.75
X.X ±0.25
X.XX ±0.13
ALL ANGULAR TOLERANCES ±1°
GEOMETRIC TOLERANCING PER ASME Y14.5M 1994

MATERIAL:
HEAT TREAT:
DESCRIPTION: INSTALLATION MG-5114DC

DATE: 04/17/2014
SCALE: 1:4
DRAWN BY: PM
CHECKED BY: BF
APPROVED BY: DV

TWIN DISC
RACINE, WI 53403 - USA

PX13297

DWG SIZE: A1 | SHEET: 1 OF 1 | REV: -

1025420W Rev. -