1 INPUT GROUP REFERENCE PLANE
2 NOT UTILIZED
3 LEFT MOUNTING BRACKET FACE
4 RIGHT MOUNTING BRACKET FACE

A. PROPORTIONAL CONTROL VALVE OPERATION
1. WARNING DO NOT CONNECT VALVE COIL DIRECTLY TO BATTERY/POWER SUPPLY VOLTAGE.
2. OPERATION TO BE PERFORMED WITH ONLY TWIN-DISC CONTROL SYSTEM MODULES.

B. MANUAL DIRECTIONAL CONTROL VALVE OPERATION
1. WITH MANUAL DIRECTIONAL CONTROL VALVE IN CENTERED POSITION, PUSH TO ENGAGE PRIMARY CLUTCH.
2. WITH MANUAL DIRECTIONAL CONTROL VALVE IN CENTERED POSITION, PULL TO ENGAGE SECONDARY CLUTCH.

C. MANUAL DIRECTIONAL CONTROL VALVE MODE SWITCH
1. SWITCH IS NORMALLY CLOSED WHEN MANUAL DIRECTIONAL CONTROL VALVE IS IN THE CENTERED POSITION AND OPEN WHEN LEVER IS ACTUATED FROM CENTERED POSITION.
2. CURRENT = 20 AMPS MAX.
3. FOR WIRING SCHEMATIC, REFER TO CONTROL MODULE DRAWING.

D. REFERENCE S930 FOR TWIN DISC REQUIREMENTS FOR PRESSURE AND ALARM LEVELS.

E. MAXIMUM AND MINIMUM PERMISSIBLE DIMENSIONS FOR DRILLING ∅17.0 HOLES (TO BE DONE BY CUSTOMER) SHOWN. A TOTAL OF 10 HOLES MUST BE USED BY THE CUSTOMER TO MOUNT BRACKET TO VESSEL FRAME, 3 HOLES ON EACH SIDE AND 4 HOLES AT THE REAR OF THE MARINE TRANSMISSION.

G. UNLESS OTHERWISE SPECIFIED, FASTENER TORQUE VALUES PER S574 STANDARD.

F. ALL POINTS AVAILABLE FOR TESTING ARE CODED

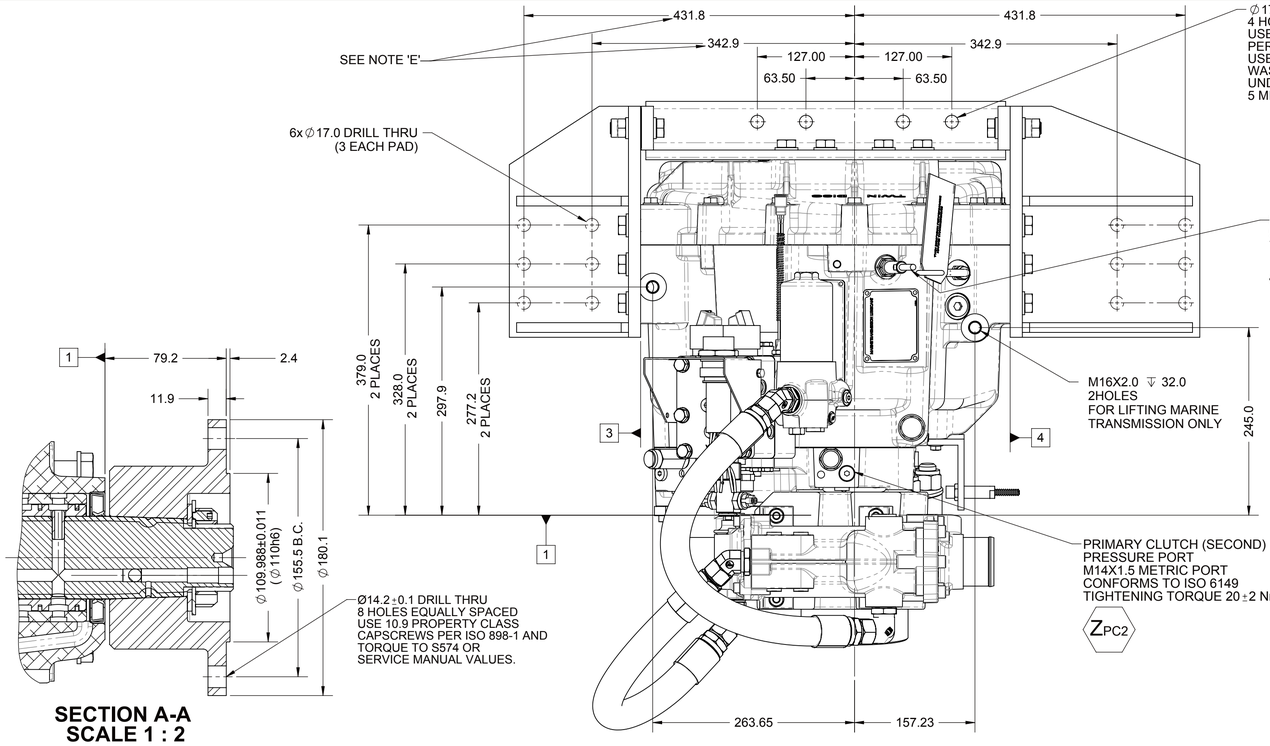

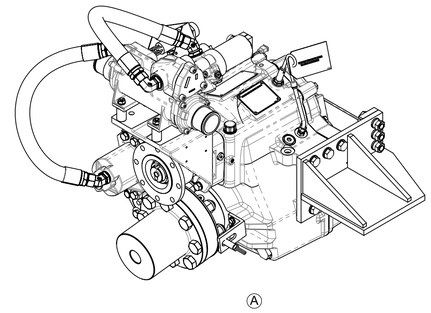

SECTION A-A
SCALE 1 : 2

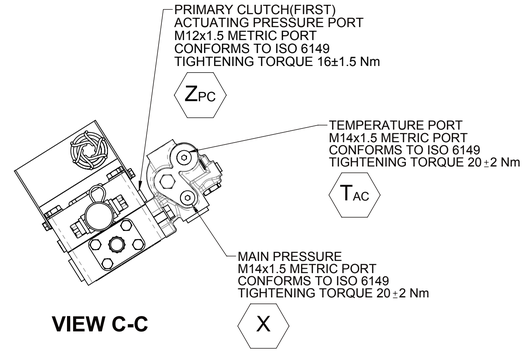

VIEW C-C

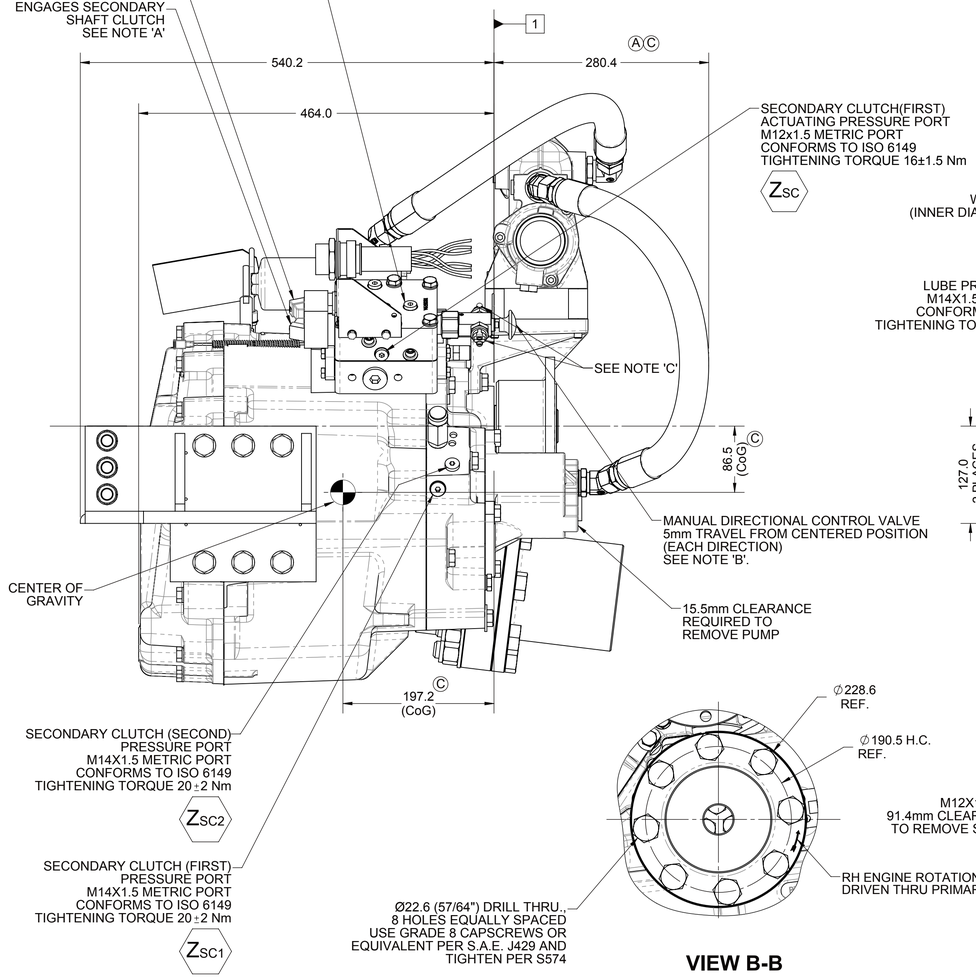

VIEW B-B

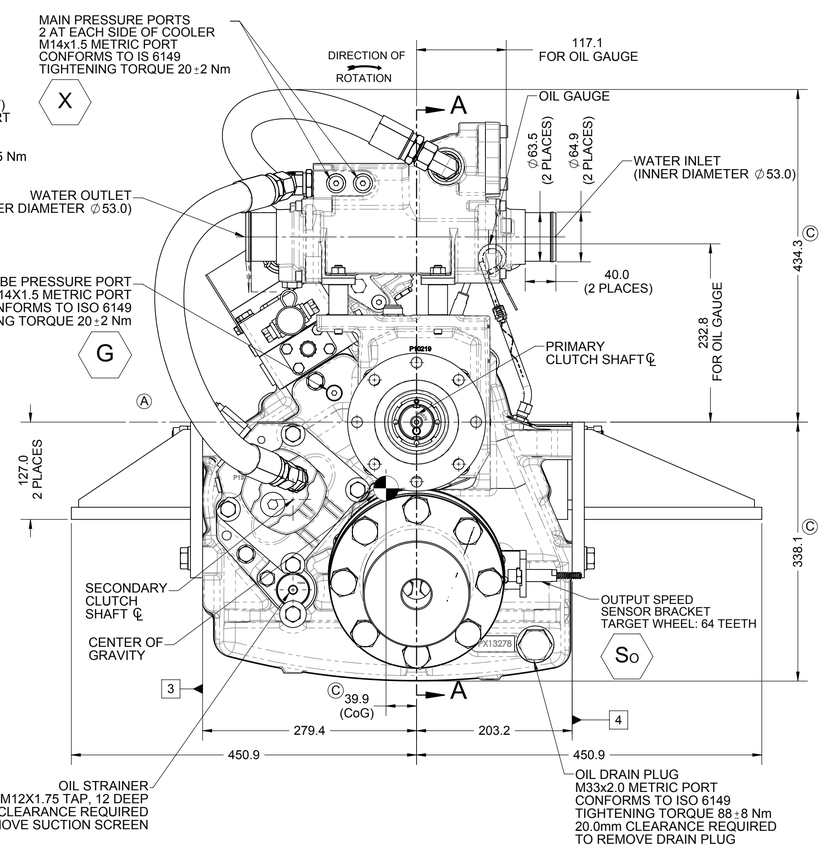

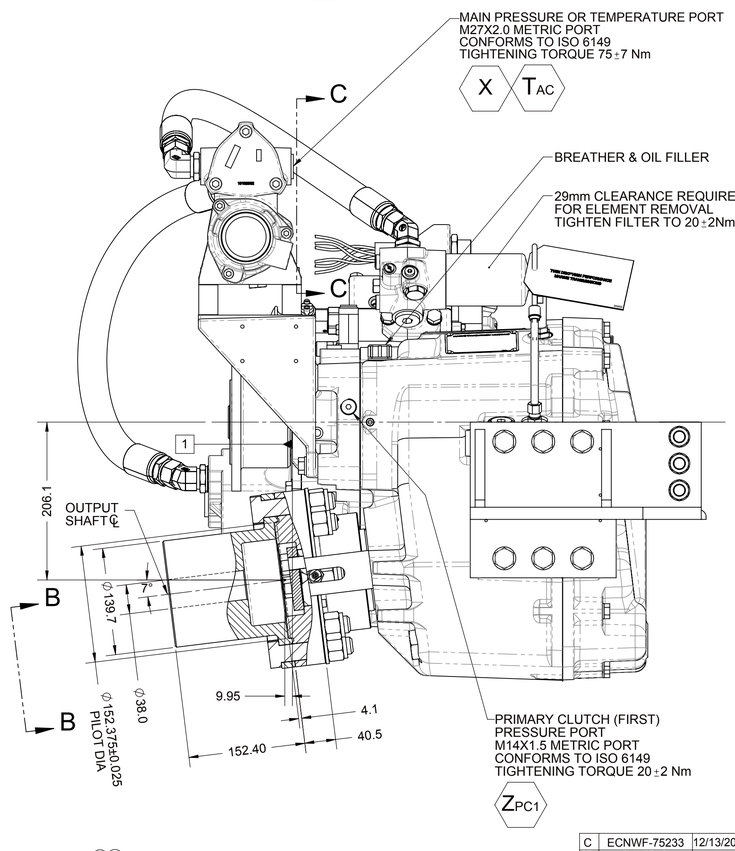

EQUIPMENT SHOWN:
- MGX-5114RV PER PX13270 ASSEMBLY
- GWB 587.35 FREE STANDING FLANGE
- GP VALVE WITH EC300 HARNESS
- PM13008 MOUNTED HEAT EXCHANGER GROUP
- 1026621 COMPANION FLANGE
- 1016428BJ STANDARD BRACKETS

FIRST USE ASSEMBLY:	WEIGHT: 295.3 kg	THIRD ANGLE PROJECTION	MATERIAL:	DATE: 09/25/2014	C ECNWF-75233 12/13/2017 (REV / CHANGE NO / DATE)
FIRST USE MODEL:	WR²: kg-m²			SCALE: 1:4	TWIN DISC, RACINE, WI 53403 - USA
SIMILAR TO:			HEAT TREAT:	DRAWN BY: MG	
METRIC		UNLESS OTHERWISE SPECIFIED MACHINED DIMENSIONS X ±0.75 X.X ±0.25 X.XX ±0.13 ALL ANGULAR TOLERANCES ±1° GEOMETRIC TOLERANCING PER ASME Y14.5M 1994	DESCRIPTION: INSTALLATION MGX-5114RV	CHECKED BY: BF	PX13365
				APPROVED BY: DV	DWG SIZE: A1 SHEET: 1 OF 1 REV: C

NOTICE! THIS PRINT CONTAINS PROPRIETARY INFORMATION AND IS NOT TO BE USED IN ANY MANNER DETRIMENTAL TO THE INTEREST OF TWIN DISC, INCORPORATED.
THIS NOTICE IS NOT INTENDED TO NULLIFY ANY RIGHTS GRANTED TO THE U.S. GOVERNMENT OR OTHERS BY CONTRACT.

1025420W Rev. A