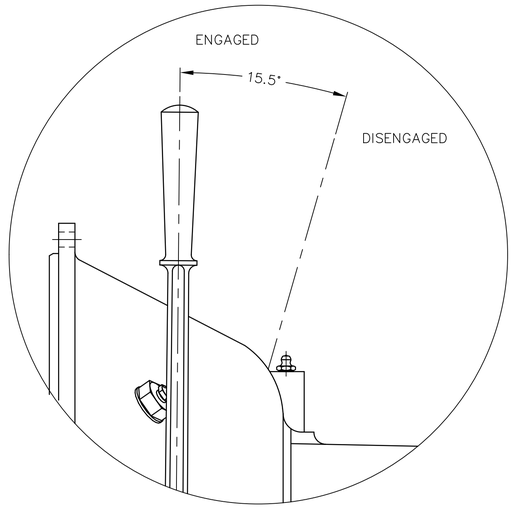


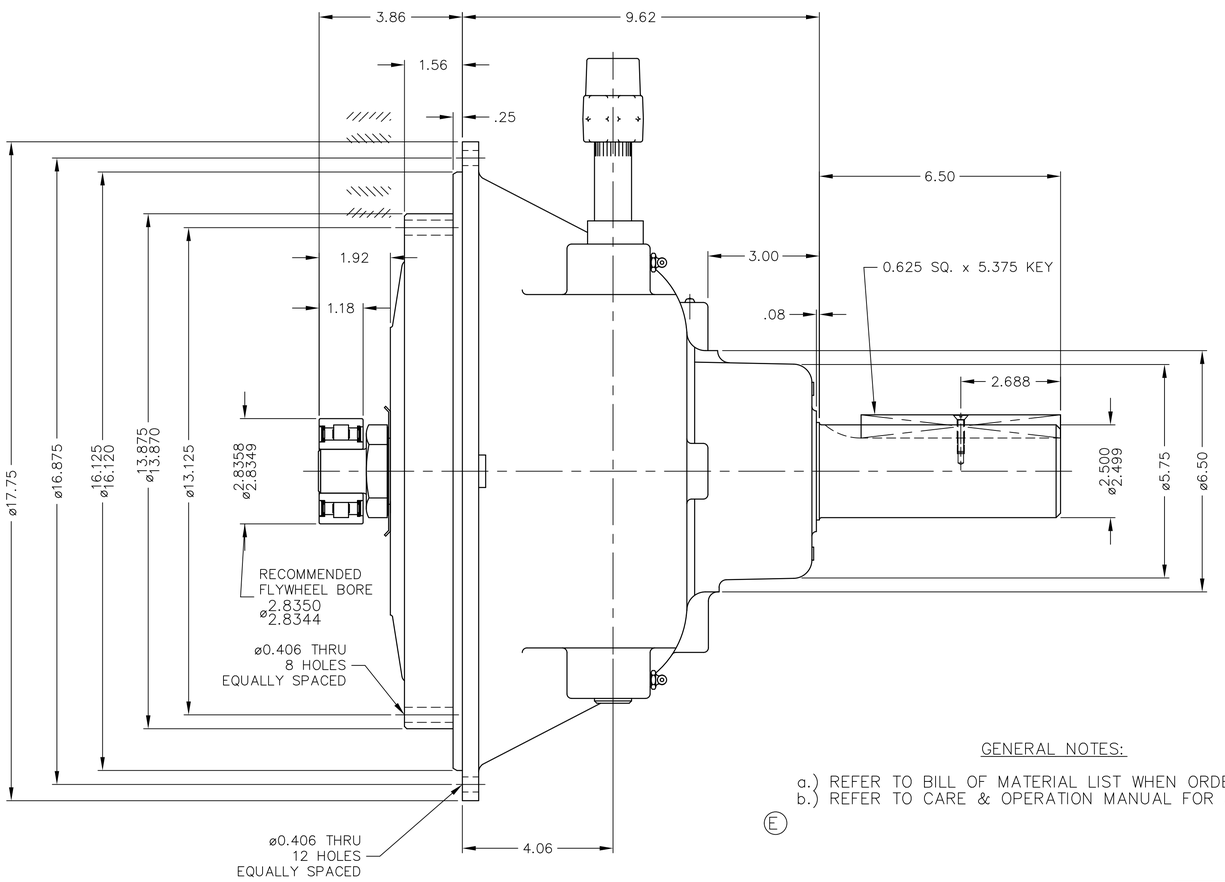


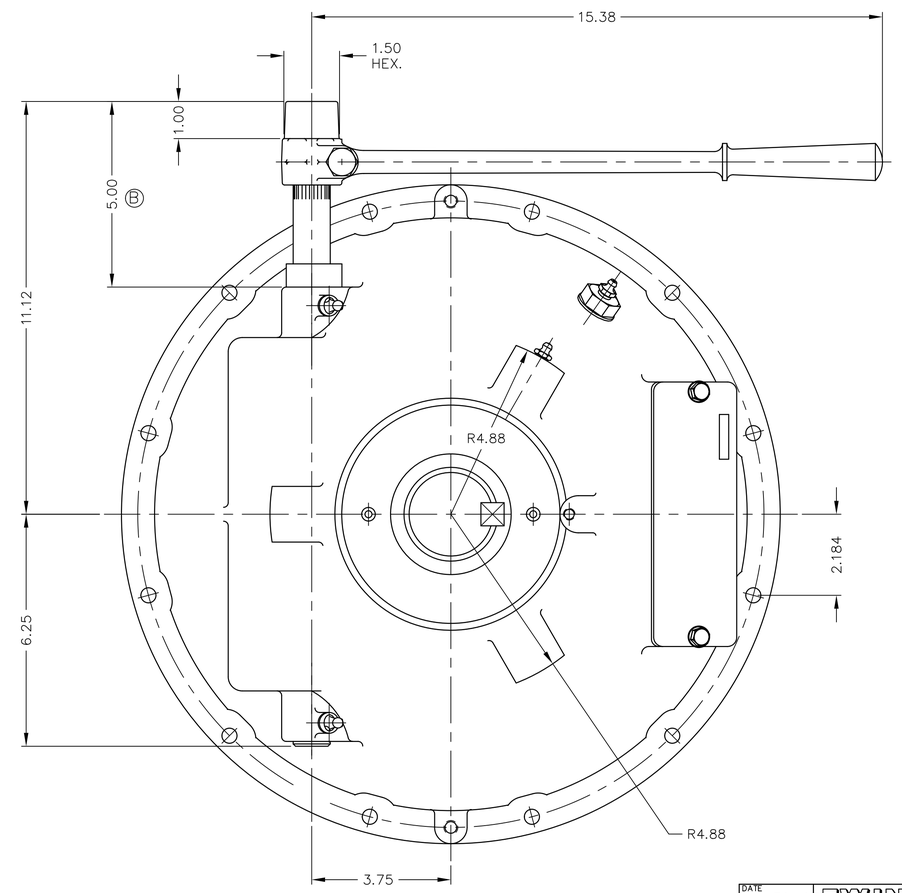


GENERAL NOTES:

a.) REFER TO BILL OF MATERIAL LIST WHEN ORDERING PARTS.
b.) REFER TO CARE & OPERATION MANUAL FOR ADDITIONAL INFO..

E

| | | | | | |
|---|---|---|---|---|---|
| UNLESS OTHERWISE SPECIFIED<br>MACHINED DIMENSIONS<br>X.X ±0.030<br>X.XX ±0.010<br>X.XXX ±0.005<br>ALL ANGULAR TOLERANCES ±1°<br>GEOMETRIC TOLERANCING<br>PER ASME Y14.5M 1994 | WEIGHT<br>LBS. | $WR^2$<br>LBS./IN$^2$ | FIRST USE<br>ASSY. SP211P323<br>MODEL SP211HP3 | INCH<br>THIRD ANGLE PROJECTION | MATERIAL<br>SIMILAR TO |
| | NOTICE! THIS PRINT CONTAINS PROPIETARY INFORMATION AND IS NOT TO BE USED IN ANY MANNER DETRIMENTAL TO THE INTEREST OF TWIN DISC, INCORPORATE. THIS NOTICE IS NOT INTENDED TO NULLIFY OR LIMIT RIGHTS GRANTED TO THE U.S. GOVERNMENT OR OTHERS BY CONTRACT. | | | | |

| | | |
|---|---|---|
| HEAT TREAT | DATE 04-30-07 | TWIN DISC INCORPORATED RACINE, WI 53403 – USA |
| | SCALE .50 = 1 | |
| | DRN. DJH | SP211P323 |
| NAME SP211HP3 POWER TAKE OFF | CHK. DDB | |
| | APPD. DDB | DWG SIZE D SHT 2 OF 2 REV E |