GENERAL NOTES:

a.) REFER TO BILL OF MATERIAL LIST WHEN ORDERING PARTS.

b.) REFER TO CARE & OP. MANUAL FOR ADDITIONAL INFO.

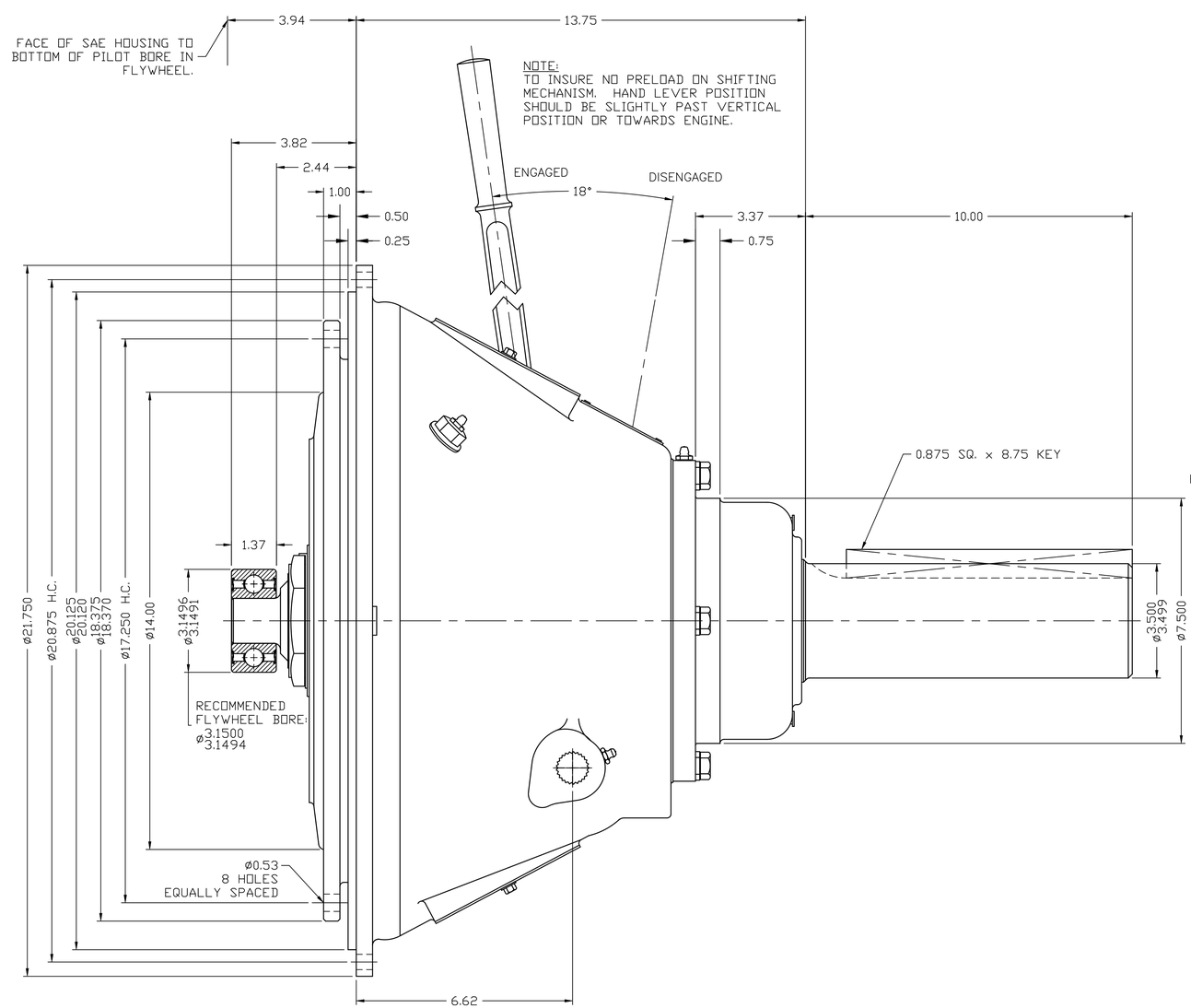

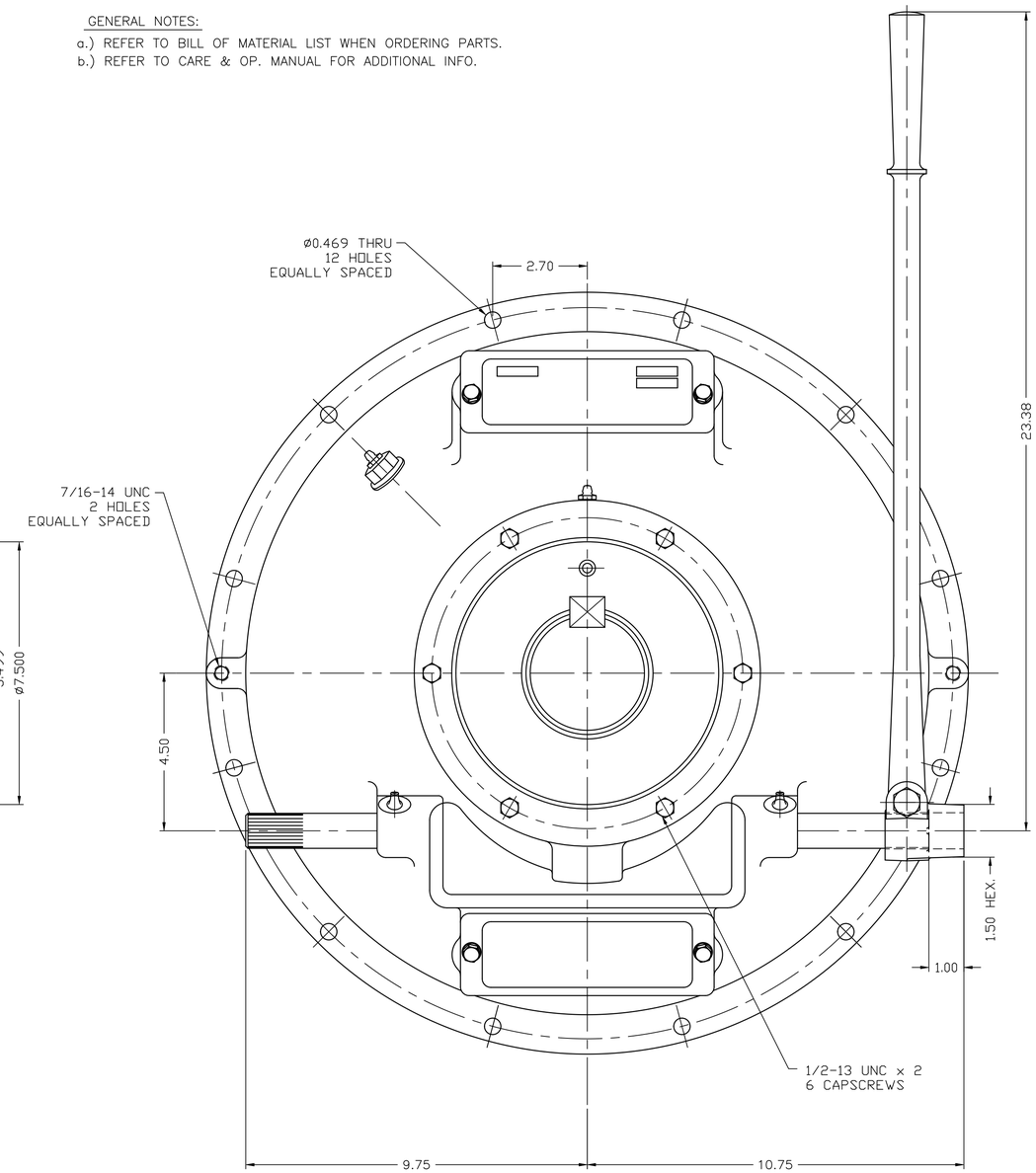

(E) OBSOLETE FOR PRODUCTION. REPLACED BY PX1039943C FOR SERVICE PER ECNWF-101270

UNLESS OTHERWISE SPECIFIED
MACHINED DIMENSIONS
X.X ±0.030
X.XX ±0.010
X.XXX ±0.005
ALL ANGULAR TOLERANCES ±1°
GEOMETRIC TOLERANCING PER ASME Y14.5M 1994

WEIGHT LBS. | WR² LBS.-IN² | FIRST USE ASSY. SP214P114 MODEL SP214P1

NOTICE! THIS PRINT CONTAINS PROPIETARY INFORMATION AND IS NOT TO BE USED IN ANY MANNER DETRIMENTAL TO THE INTEREST OF TWIN DISC, INCORPORATE
THIS NOTICE IS NOT INTENDED TO NULLIFY OR LIMIT RIGHTS GRANTED TO THE U.S. GOVERNMENT OR OTHERS BY CONTRACT.

INCH

THIRD ANGLE PROJECTION

MATERIAL

SIMILAR TO X9803

HEAT TREAT

NAME SP214P1 POWER TAKE-OFF

DATE 06-13-03
SCALE .50 = 1
DRN. DJH
CHK. JTS
APP'D. JTS

TWIN DISC INCORPORATED RACINE, WI 53403 - USA

SP214P114

DWG SIZE D SHT. 2 OF 2 REV E